EBARA

CONTENTS

60Hz

Rev. G

	Page
- SPECIFICATIONS	**200**
SELECTION CHART	202
TYPE KEY AND CURVE SPECIFICATIONS	205
PERFORMANCE CURVE EVM(.) 3	208
PERFORMANCE CURVE EVM(.) 5	212
PERFORMANCE CURVE EVM(.) 10	216
PERFORMANCE CURVE EVM(.) 18	220
PERFORMANCE CURVE EVM(.) 32	224
PERFORMANCE CURVE EVM(.) 45	231
PERFORMANCE CURVE EVM(.) 64	237
- CONSTRUCTION	**300**
SECTIONAL VIEW DRAWING EVM(.) 3 without ball bearing	300
SECTIONAL VIEW DRAWING EVM(.) 3 with single ball bearing	301
SECTIONAL VIEW DRAWING EVMG 3 without ball bearing	302
SECTIONAL VIEW DRAWING EVMG 3 with single ball bearing	303
SECTIONAL VIEW DRAWING EVM(.) 5 without ball bearing	304
SECTIONAL VIEW DRAWING EVM(.) 5 with single ball bearing	305
SECTIONAL VIEW DRAWING EVMG 5 without ball bearing	306
SECTIONAL VIEW DRAWING EVMG 5 with single ball bearing	307
SECTIONAL VIEW DRAWING EVM(.) 10 without ball bearing	308
SECTIONAL VIEW DRAWING EVM(.) 10 with single ball bearing	309
SECTIONAL VIEW DRAWING EVMG 10 without ball bearing	311
SECTIONAL VIEW DRAWING EVMG 10 with single ball bearing	312
SECTIONAL VIEW DRAWING EVM(.) 18 without ball bearing	314
SECTIONAL VIEW DRAWING EVM(.) 18 with single ball bearing	315
SECTIONAL VIEW DRAWING EVMG 18 without ball bearing	317
SECTIONAL VIEW DRAWING EVMG 18 with single ball bearing	318
SECTIONAL VIEW DRAWING EVM(.) 32 without bearing	320
SECTIONAL VIEW DRAWING EVM(.) 32 with single bearing	321
SECTIONAL VIEW DRAWING EVM(.) 32 with double bearing	323
SECTIONAL VIEW DRAWING EVMG 32 without bearing	324
SECTIONAL VIEW DRAWING EVMG 32 with single bearing	325
SECTIONAL VIEW DRAWING EVMG 32 with double bearing	327
SECTIONAL VIEW DRAWING EVM(.) 45 with single bearing	328
SECTIONAL VIEW DRAWING EVM(.) 45 with double bearing	330
SECTIONAL VIEW DRAWING EVMG 45 with single bearing	331
SECTIONAL VIEW DRAWING EVMG 45 with double bearing	333
SECTIONAL VIEW DRAWING EVM(.) 64 with single bearing	334
SECTIONAL VIEW DRAWING EVM(.) 64 with double bearing	336
SECTIONAL VIEW DRAWING EVMG 64 with single bearing	337
SECTIONAL VIEW DRAWING EVMG 64 with double bearing	339

CONTENTS

60Hz

Rev. G

	Page
SECTIONAL VIEW TABLE EVM(.) 3-5	340
SECTIONAL VIEW TABLE EVM(.) 10	342
SECTIONAL VIEW TABLE EVM(.) 18	344
SECTIONAL VIEW TABLE EVM(.) 32	346
SECTIONAL VIEW TABLE EVM(.) 45	348
SECTIONAL VIEW TABLE EVM(.) 64	350
QUANTITY FOR MODEL EVM(.) 3-5	352
QUANTITY FOR MODEL EVM(.) 10-18	353
QUANTITY FOR MODEL EVM(.) 32	354
QUANTITY FOR MODEL EVM(.) 45	355
QUANTITY FOR MODEL EVM(.) 64	356
BEARINGS	357
BEARINGS	358
MECHANICAL SEAL	359
- DIMENSIONS AND WEIGHT	**400**
DIMENSIONS DRAWING EVM(.) 3-18	400
DIMENSIONS TABLE EVM(.) 3-5	401
DIMENSIONS TABLE EVM(.) 10-18	402
DIMENSIONS DRAWING EVM(.) 32-64	403
DIMENSIONS TABLE EVM(.) 32	404
DIMENSIONS TABLE EVM(.) 45	405
DIMENSIONS TABLE EVM(.) 64	406
PACKING DRAWINGS	407
PACKING TABLE EVM(.) 3-5	408
PACKING TABLE EVM(.) 10-18	409
PACKING TABLE EVM(.) 32	410
PACKING TABLE EVM(.) 45	411
PACKING TABLE EVM(.) 64	412
- TECHNICAL DATA	**500**
MOTOR DATA EVM(.) 3-18	500
MOTOR DATA EVM(.) 32	501
MOTOR DATA EVM(.) 45	502
MOTOR DATA EVM(.) 64	503

SPECIFICATIONS

60Hz

Rev. G

EVM(.) 3-18

PUMP				
Version		EVMG	EVM	EVML
Liquid Handled	Type of liquid	Clean water, water contains glycol and moderately aggressive fluids	*Drinking water, Clean water, water contains glycol and moderately aggressive fluids	Clean water, water contains glycol and moderately aggressive fluids
	Temperature [°C]	min. -15 max. +120		
	Max solid content	50 ppm (particle size 0.1-0.25 mm or less)		
	Max chlorine ion density	500 ppm		
Maximum working pressure	[MPa]	1.6 / 2.5		
	[bar]	16 / 25		
Construction	Impeller	Closed centrifugal type		
	Shaft seal type	Mechanical seal		
	Bearing	Sealed ball bearing with permanent grease		
Pipe Connection	Suction	See dimension table		
	Discharge			
Material	Impeller	EN 1.4301 (AISI 304)		EN 1.4401 (AISI 316)
	Intermediate casing	EN 1.4301 (AISI 304)		EN 1.4401 (AISI 316)
	Bottom casing	Cast iron	EN 1.4301 (AISI 304)	EN 1.4401 (AISI 316)
	Casing cover	Cast iron	EN 1.4301 (AISI 304)	EN 1.4401 (AISI 316)
	Outer casing	EN 1.4301 (AISI 304)		EN 1.4401 (AISI 316)
	Shaft	EN 1.4401 (AISI 316)		
	Liner ring	EPDM / EN 1.4301 (AISI 304)		PTFE / EN 1.4401 (AISI 316)
	Motor bracket	Cast iron	Cast iron / EN 1.4301 (AISI 304)	Cast iron / EN 1.4401 (AISI 316)
	Mechanical seal	Silicon Carbide/Carbon/EPDM		Silicon Carbide/Carbon/FPM
	O-ring	EPDM		FPM
Applicable standard of test		ISO 9906 – Annex A		

* Approval for drinking water application
WRAS Approved product
DM174/2004

MOTOR	
Type	Electric - TEFC
	Three Phase
Efficiency level (Reg. 640/2009)	- from 0.37 kW to 0.55 kW (*) IE2 from 0.75 kW to 18.5 kW
No. of Poles	2
Rotation speed [min^{-1}]	≈ 3500
Insulation Class	F (temperature rise class B)
Protection degree (CEI EN 60034-5)	IP 55
Power rating [kW]	0.37 ÷ 18.5
[HP]	0.5 ÷ 25
Frequency [Hz]	60
Voltage [V]	220/380 ±10% (up to 4 kW) 265/460 ±10% (up to 4 kW) 380/660 ±10% (above 5.5 kW) 460 ±10% (above 5.5 kW)
Over load protection	Provided by the user
Casing material	Aluminium
Flange mount (IEC motor)	IM B14 (up to 4 kW) IM B5 (above 5.5 kW)

(*) only for voltage 265/460 V ±10% and 460 V ±10% Delta connection

SPECIFICATIONS 60Hz

Rev. G

EVM(.) 32-64

PUMP					
Version			**EVMG**	**EVM**	**EVML**
Liquid Handled	Type of liquid		Clean water, water contains glycol and moderately aggressive fluids		
	Temperature	[°C]	min. -15 max. +120		
	Max solid content		50 ppm (particle size 0.1-0.25 mm or less)		
	Max chlorine ion density		500 ppm		
Maximum working pressure		[MPa]	1.6 / 3.0		
		[bar]	16 / 30		
Construction	Impeller		Closed centrifugal type		
	Shaft seal type		Mechanical seal		
	Bearing		Sealed ball bearing with permanent grease		
Pipe Connection	Suction		See dimension table		
	Discharge				
Material	Impeller		EN 1.4301 (AISI 304)		EN 1.4401 (AISI 316)
	Intermediate casing		EN 1.4301 (AISI 304)		EN 1.4401 (AISI 316)
	Bottom casing		Cast iron	ASTMCF8	ASTMCF8M
	Casing cover		Cast iron	Cast iron + EN 1.4301 (AISI 304)	Cast iron + EN 1.4401 (AISI 316)
	Outer casing		EN 1.4301 (AISI 304)		EN 1.4401 (AISI 316)
	Shaft		EN 1.4401 (AISI 316)		
	Liner ring	EVM 32	EPDM / EN 1.4301 (AISI 304)		PTFE / EN 1.4401 (AISI 316)
		EVM 45, 64	PTFE / EN 1.4401 (AISI 316)		
	Motor bracket		Cast iron		
	Mechanical seal		Silicon Carbide/Carbon/FPM		
	O-ring		EPDM		FPM
Applicable standard of test			ISO 9906 – Annex A		

MOTOR		
Type		Electric - TEFC
		Three Phase
Efficiency level (Reg. 640/2009)		IE2 from 4.0 kW to 37 kW
No. of Poles		2
Rotation speed	[min^{-1}]	≈ 3500
Insulation Class		F (temperature rise class B)
Protection degree (CEI EN 60034-5)		IP 55
Power rating	[kW]	4.0 ÷ 37
	[HP]	5.5 ÷ 50
Frequency	[Hz]	50
Voltage	[V]	220/380 ±10% (up to 4 kW) 265/460 ±10% (up to 4 kW) 380/660 ±10% (above 5.5 kW) 460 ±10% (above 5.5 kW)
Over load protection		Provided by the user
Casing material		Aluminium
Flange mount (IEC motor)		IM B14 (up to 4 kW) IM B5 (above 5.5 kW)

(*) only for voltage 265/460 V ±10% and 460 V ±10% Delta connection

SELECTION CHART

60Hz

Rev. G

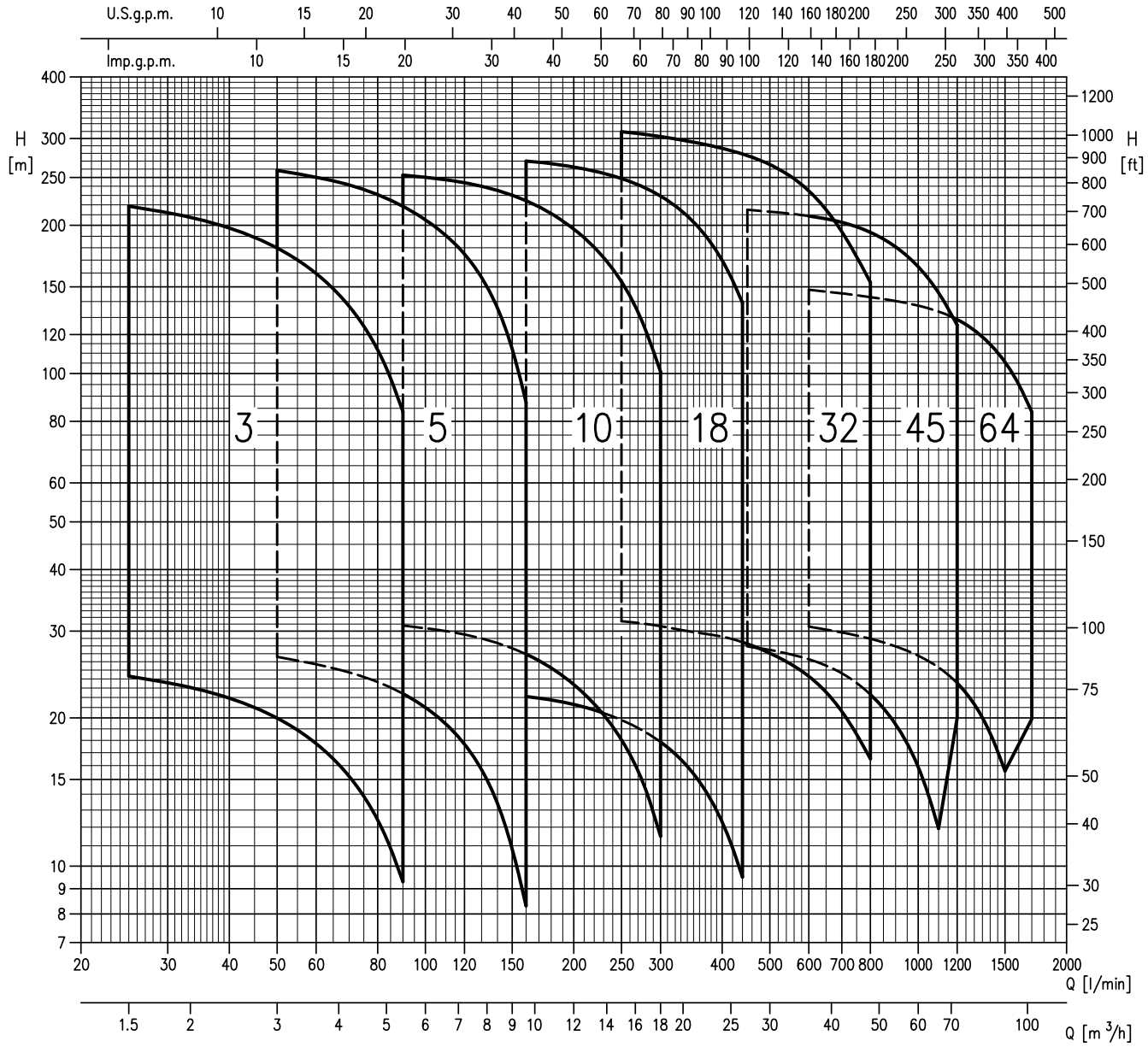

SELECTION CHART

60Hz

Rev. G

EVM(.) 3-18

Pump Type EVM (.) Three phase	Motor kW	Motor HP	Motor Size	Maximum working pressure (MPa)	Q=Capacity l/min 0	25	50	75	90	120	160	200	250	300	350	400	440
					m³/h 0	1,5	3,0	4,5	5,4	7,2	9,6	12,0	15,0	18,0	21,0	24,0	26,4
					H=Total manometric head in meters												
3 2N6/0.37	0.37	0.5	71	1.6	26,8	24,3	20,0	13,9	9,3	-	-	-	-	-	-	-	-
3 3N6/0.55	0.55	0.75	71		40,0	36,5	30,0	20,8	14,0	-	-	-	-	-	-	-	-
3 4N6/0.75	0.75	1.0	80		53,5	48,5	40,0	27,7	18,6	-	-	-	-	-	-	-	-
3 5N6/1.1	1.1	1.5	80		67,0	61,0	50,0	34,7	23,3	-	-	-	-	-	-	-	-
3 6N6/1.1	1.1	1.5	80		80,5	73,0	60,0	41,5	27,9	-	-	-	-	-	-	-	-
3 7N6/1.5	1.5	2.0	90S		94,0	85,0	70,0	48,5	32,6	-	-	-	-	-	-	-	-
3 8N6/1.5	1.5	2.0	90S		107,0	97,0	80,0	55,5	37,2	-	-	-	-	-	-	-	-
3 9N6/2.2	2.2	3.0	90L		121,0	109,0	90,0	62,5	42,0	-	-	-	-	-	-	-	-
3 11F6/2.2	2.2	3.0	90L	2.5	147,0	134,0	110,0	76,0	51,0	-	-	-	-	-	-	-	-
3 12F6/2.2	2.2	3.0	90L		161,0	146,0	120,0	83,0	56,0	-	-	-	-	-	-	-	-
3 13F6/3.0	3.0	4.0	100		174,0	158,0	130,0	90,0	60,5	-	-	-	-	-	-	-	-
3 15F6/3.0	3.0	4.0	100		201,0	182,0	150,0	104,0	70,0	-	-	-	-	-	-	-	-
3 18F6/4.0	4.0	5,5	112		241,0	219,0	180,0	125,0	83,5	-	-	-	-	-	-	-	-
5 2N6/0.75	0.75	1.0	80	1.6	29,1	-	26,6	24,2	22,4	17,7	8,3	-	-	-	-	-	-
5 3N6/1.1	1.1	1.5	80		43,5	-	39,9	36,3	33,6	26,6	12,5	-	-	-	-	-	-
5 4N6/1.5	1.5	2.0	90S		58,0	-	53,0	48,5	45,0	35,4	16,6	-	-	-	-	-	-
5 5N6/2.2	2.2	3.0	90L		73,0	-	66,5	60,5	56,0	44,5	20,8	-	-	-	-	-	-
5 6N6/2.2	2.2	3.0	90L		87,5	-	80,0	72,5	67,0	53,0	24,9	-	-	-	-	-	-
5 7N6/3.0	3.0	4.0	100		102,0	-	93,0	85,0	78,5	62,0	29,1	-	-	-	-	-	-
5 8N6/3.0	3.0	4.0	100		116,0	-	106,0	97,0	89,5	71,0	33,2	-	-	-	-	-	-
5 10N6/4.0	4.0	5.5	112		146,0	-	133,0	121,0	112,0	88,5	41,5	-	-	-	-	-	-
5 11F6/4.0	4.0	5.5	112	2.5	160,0	-	146,0	133,0	123,0	97,5	45,5	-	-	-	-	-	-
5 12F6/4.0	4.0	5.5	112		179,0	-	163,0	150,0	138,0	110,0	55,0	-	-	-	-	-	-
5 14F6/5.5	5.5	7.5	132S		209,0	-	190,0	174,0	161,0	129,0	64,5	-	-	-	-	-	-
5 16F6/5.5	5.5	7.5	132S		238,0	-	218,0	199,0	184,0	147,0	73,5	-	-	-	-	-	-
5 19F6/7.5	7.5	10	132S		283,0	-	260,0	236,0	219,0	175,0	87,5	-	-	-	-	-	-
10 2N6/1.5	1.5	2.0	90S	1.6	32,0	-	-	-	30,8	29,5	26,9	23,4	18,1	11,5	-	-	-
10 3N6/2.2	2.2	3.0	90L		48,0	-	-	-	46,0	44,5	40,5	35,0	27,1	17,3	-	-	-
10 4N6/3.0	3.0	4.0	100		64,0	-	-	-	61,5	59,0	54,0	46,5	36,1	23,0	-	-	-
10 5N6/4.0	4.0	5.5	112		80,0	-	-	-	77,0	74,0	67,5	58,5	45,0	28,8	-	-	-
10 6N6/4.0	4.0	5.5	112		96,0	-	-	-	92,5	88,5	81,0	70,0	54,0	34,5	-	-	-
10 8N6/5.5	5.5	7.5	132S		128,0	-	-	-	123,0	118,0	108,0	93,5	72,0	46,0	-	-	-
10 10F6/7.5	7.5	10	132S	2.5	162,0	-	-	-	158,0	153,0	140,0	123,0	96,0	63,0	-	-	-
10 11F6/7.5	7.5	10	132S		178,0	-	-	-	174,0	168,0	154,0	135,0	106,0	69,5	-	-	-
10 12F6/7.5	7.5	10	132S		194,0	-	-	-	190,0	183,0	168,0	147,0	115,0	75,5	-	-	-
10 14F6/11	11	15	160M		227,0	-	-	-	221,0	214,0	196,0	172,0	133,0	88,0	-	-	-
10 16F6/11	11	15	160M		259,0	-	-	-	253,0	244,0	224,0	197,0	154,0	101,0	-	-	-
18 1F6/2.2	2.2	3	90L	1.6	23,0	-	-	-	-	-	22,1	21,3	19,8	17,9	15,4	12,3	9,5
18 2F6/3.0	3.0	4.0	100		46,0	-	-	-	-	-	44,0	42,5	39,6	35,7	30,8	24,6	19,0
18 3F6/5.5	5.5	7.5	132S		69,0	-	-	-	-	-	66,5	64,0	59,5	53,5	46,0	36,9	28,5
18 4F6/7.5	7.5	10	132S		92,0	-	-	-	-	-	88,5	85,0	79,0	71,5	61,5	49,0	38,0
18 5F6/7.5	7.5	10	132S		115,0	-	-	-	-	-	111,0	107,0	99,0	89,5	77,0	61,5	47,5
18 6F6/11	11	15	160M		139,0	-	-	-	-	-	135,0	131,0	124,0	115,0	102,0	85,0	69,5
18 7F6/11	11	15	160M	2.5	162,0	-	-	-	-	-	158,0	153,0	145,0	134,0	118,0	99,0	81,0
18 8F6/15	15	20	160M		186,0	-	-	-	-	-	180,0	175,0	166,0	153,0	135,0	113,0	93,0
18 10F6/15	15	20	160M		232,0	-	-	-	-	-	225,0	219,0	207,0	191,0	169,0	142,0	116,0
18 11F6/18.5	18.5	25	160L		255,0	-	-	-	-	-	248,0	241,0	228,0	210,0	186,0	156,0	128,0
18 12F6/18.5	18.5	25	160L		278,0	-	-	-	-	-	270,0	263,0	249,0	229,0	203,0	170,0	139,0

1.6 MPa=16 bar

2.5 MPa=25 bar

SELECTION CHART

60Hz

Rev. G

EVM(.) 32-64

Pump Type	Motor [kW]	Motor [HP]	Motor Size	Maximum working pressure [MPa]	Q=Capacity l/min 0	250	450	600	700	800	950	1100	1200	1500	1700
					m³/h 0	15	27	36	42	48	57	66	72	90	102
					H=Total manometric head in meters										
32 1-0F6/4.0	4	5,5	112	1,6	34,7	31,4	28,3	24,3	20,6	16,5	-	-	-	-	-
32 2-2F6/5.5	5,5	7,5	132S		56,5	52,5	43,5	33,6	25,7	-	-	-	-	-	-
32 2-0F6/7.5	7,5	10	132S		69,5	63	56,6	48,5	41	33,1	-	-	-	-	-
32 3-3F6/7.5	7,5	10	132S		84,5	79	65,3	50,5	38,5	-	-	-	-	-	-
32 3-0F6/11	11	15	160M		104	94,0	85	72,5	62	49,5	-	-	-	-	-
32 4-3F6/11	11	15	160M		119	110	93,5	74,5	59	-	-	-	-	-	-
32 4-0F6/15	15	20	160M		139	125	113	97	82,5	66	-	-	-	-	-
32 5-3F6/15	15	20	160M		152	143	124	99,5	79,5	61,5	-	-	-	-	-
32 5-2F6/15	15	20	160M		158	147	130	107	86,5	67,5	-	-	-	-	-
32 5-0F6/18.5	18,5	25	160L		169	157	141	121	100	79,5	-	-	-	-	-
32 6-3F6/18.5	18,5	25	160L	2,5	186	174	152	124	100	77,5	-	-	-	-	-
32 6-0F6/22	22	30	180		203	189	170	145	121	95,5	-	-	-	-	-
32 7-3F6/22	22	30	180		220	205	180	148	120	93	-	-	-	-	-
32 7-2F6/22	22	30	180		221	210	186	155	127	99,5	-	-	-	-	-
32 7-0F6/30	30	40	200		237	220	198	169	141	112	-	-	-	-	-
32 8-3F6/30	30	40	200		254	237	209	172	140	109	-	-	-	-	-
32 8-0F6/30	30	40	200	3,0	271	252	226	194	161	127	-	-	-	-	-
32 9-3F6/30	30	40	200		288	268	237	196	160	125	-	-	-	-	-
32 9-0F6/30	30	40	200		305	283	255	218	181	143	-	-	-	-	-
32 10-4F6/30	30	40	200		316	295	259	213	173	135	-	-	-	-	-
45 1-1F6/5.5	5,5	7,5	132S	1,6	31	-	28	26,3	24,6	22,3	17,7	11,9	-	-	-
45 1-0F6/7.5	7,5	10	132S		39,8	-	36,9	35,6	34,4	32,7	28,8	23,8	20	-	-
45 2-2F6/11	11	15	160M		62	-	56,5	53,5	50,5	46,0	37,7	26,9	-	-	-
45 2-1F6/11	11	15	160M		71	-	65,5	63	60	56,5	49,0	38,7	-	-	-
45 2-0F6/15	15	20	160M		79,5	-	74,5	72	70	67	60,0	50,5	43,5	-	-
45 3-3F6/15	15	20	160M		93	-	85	80,5	76,5	70	57,5	42,0	-	-	-
45 3-2F6/15	15	20	160M		102	-	94	90	86	80,5	69	53,5	-	-	-
45 3-1F6/18.5	18,5	25	160L		111	-	103	99,5	96	91	80	65,5	54,5	-	-
45 3-0F6/22	22	30	180		119	-	112	109	106	101	91	77,5	67	-	-
45 4-3F6/18.5	18,5	25	160L		133	-	122	117	112	104	89	68,5	53,0	-	-
45 4-2F6/22	22	30	180		142	-	131	127	122	115	100	80,5	65,5	-	-
45 4-1F6/30	30	40	200		150	-	140	136	131	125	111	92,5	78,00	-	-
45 4-0F6/30	30	40	200		159	-	149	145	141	135	122	104	91,0	-	-
45 5-3F6/30	30	40	200	2,5	173	-	160	154	148	139	120	95	76,5	-	-
45 5-2F6/30	30	40	200		181	-	169	163	157	149	131	107	89	-	-
45 5-1F6/30	30	40	200		190	-	178	172	167	159	142	119	102	-	-
45 5-0F6/37	37	50	200		199	-	187	182	177	170	153	131	114	-	-
45 6-3F6/37	37	50	200		212	-	197	190	183	173	151	122	100	-	-
45 6-2F6/37	37	50	200		221	-	206	200	193	183	162	134	113	-	-
45 6-1F6/37	37	50	200		230	-	215	209	203	194	173	146	125	-	-
64 1-1F6/7.5	7,5	10	132S	1,6	33,9	-	-	30,7	29,8	28,9	27,4	25,3	23,5	15,6	-
64 1-0F6/11	11	15	160M		42,5	-	-	38,5	37,7	36,8	35,6	33,9	32,5	26	19,9
64 2-2F6/15	15	20	160M		68,0	-	-	62	60,5	59	56,5	53	49,5	35,3	-
64 2-1F6/18.5	18,5	25	160L		76,5	-	-	70	68,5	67	64,5	61,5	58,5	45,5	33,4
64 2-0F6/22	22	30	180		85,0	-	-	77,5	76	75	73	70	67,5	56	45
64 3-3F6/22	22	30	180		102,0	-	-	93,5	91	89	85,5	80,5	76	55	-
64 3-2F6/30	30	40	200		110,0	-	-	101	99	97	93,5	89	84,5	65,5	47
64 3-1F6/30	30	40	200		119,0	-	-	109	107	105	102	97,5	93,5	75,5	58,5
64 3-0F6/30	30	40	200		128,0	-	-	117	115	113	110	106	103	86	70
64 4-3F6/30	30	40	200		144,0	-	-	132	130	127	123	116	111	85	60,5
64 4-2F6/37	37	50	200		153,0	-	-	140	138	135	131	125	120	95,5	72
64 4-1F6/37	37	50	200		162,0	-	-	148	146	143	139	134	129	106,0	83,5

1.6 MPa =16 bar
2.5 MPa =25 bar
3.0 MPa =30 bar

TYPE KEY AND CURVE SPECIFICATIONS

60Hz

Rev. G

TYPE KEY
EVM(.) 3-18

Example for pomp without motor

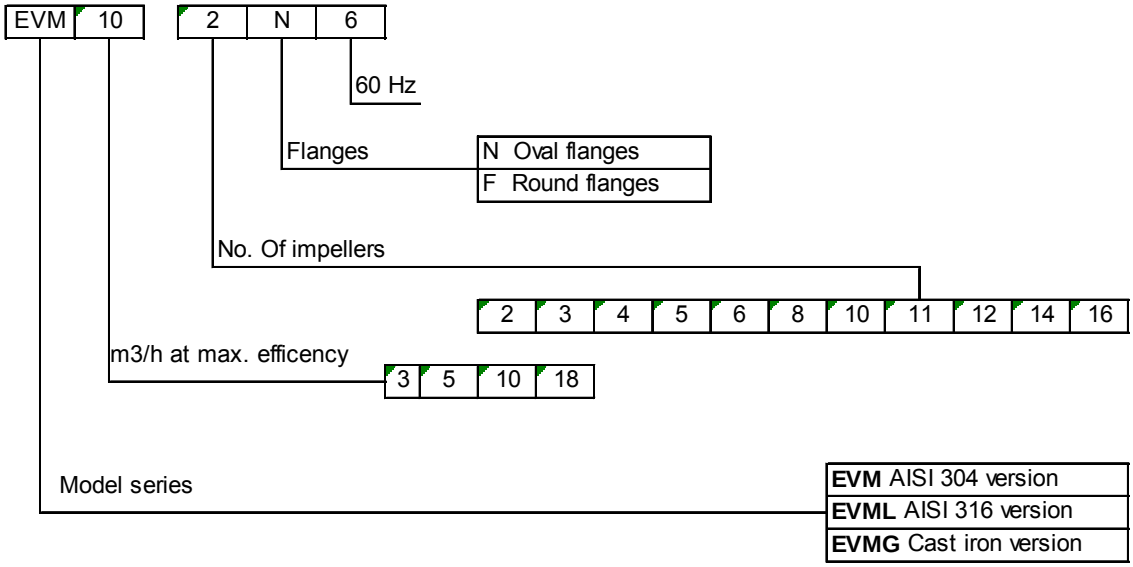

Example for pomp with motor

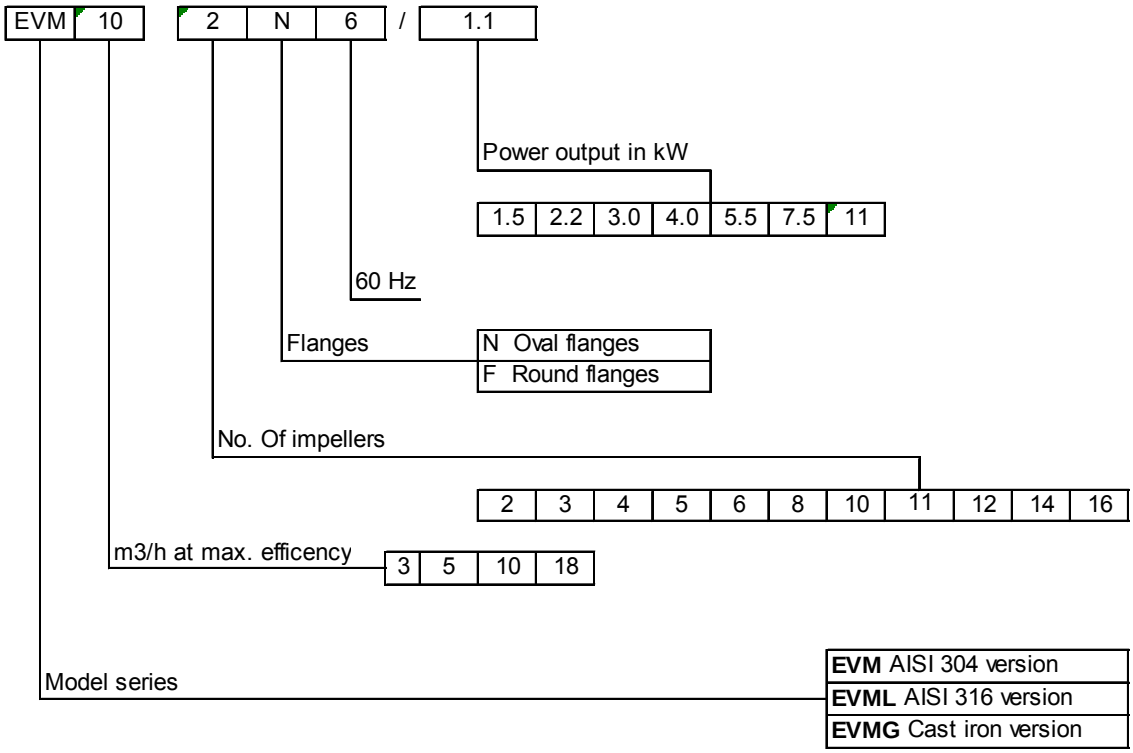

TYPE KEY AND CURVE SPECIFICATIONS

60Hz

Rev. G

EVM(.) 32-64

Example for pomp without motor

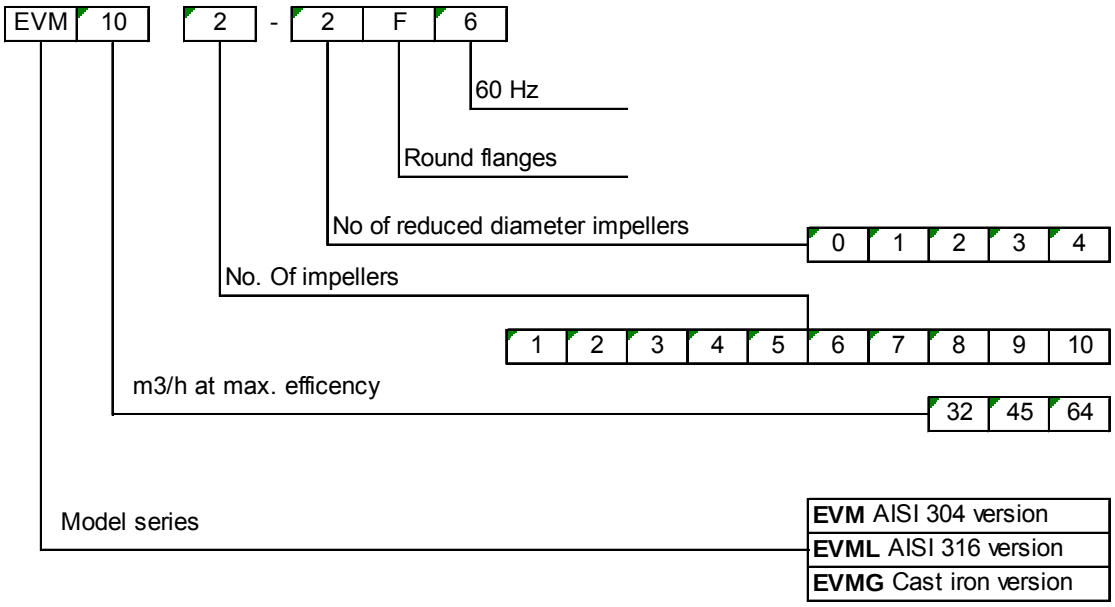

Example for pomp with motor

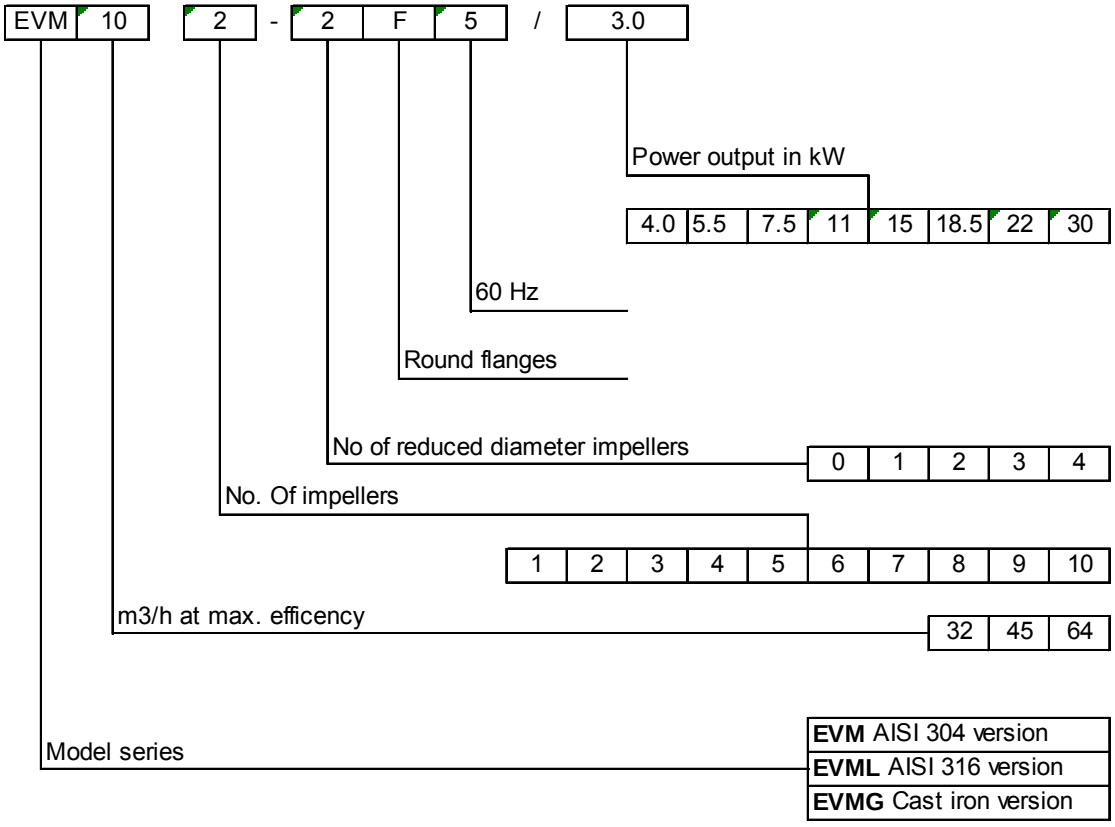

PERFORMANCE CURVE SPECIFICATIONS

The specifications below qualify the curves shown on the following pages.

Tolerances according to ISO 9906 Annex A
The curves refer to effective speed of asynchronous motors at 60 Hz
Measurements were carried out with clean water at 20°C of temperature and with a kinematic viscosity of ν = 1 mm^2/s (1 cSt)
The NPSH curve is an average curve obtained in the same conditions of performance curves.
During the pump selection, consider to get a safety margin of at least 0.5 m.
The continuous curves indicate the recommended working range. The dotted curve is only a guide.
In order to avoid the risk of over-heating, the pumps should not be used at a flow rate below 10% of best efficiency point.

Symbols explanation:

Q	=	volume flow rate
H	=	total head
P_2	=	pump power input (shaft power)
η	=	pump efficiency
NPSH	=	net positive suction head required by the pump

PERFORMANCE CURVE

60Hz

Rev. G

EVM(.) 3 - Impeller diameter = 89 mm

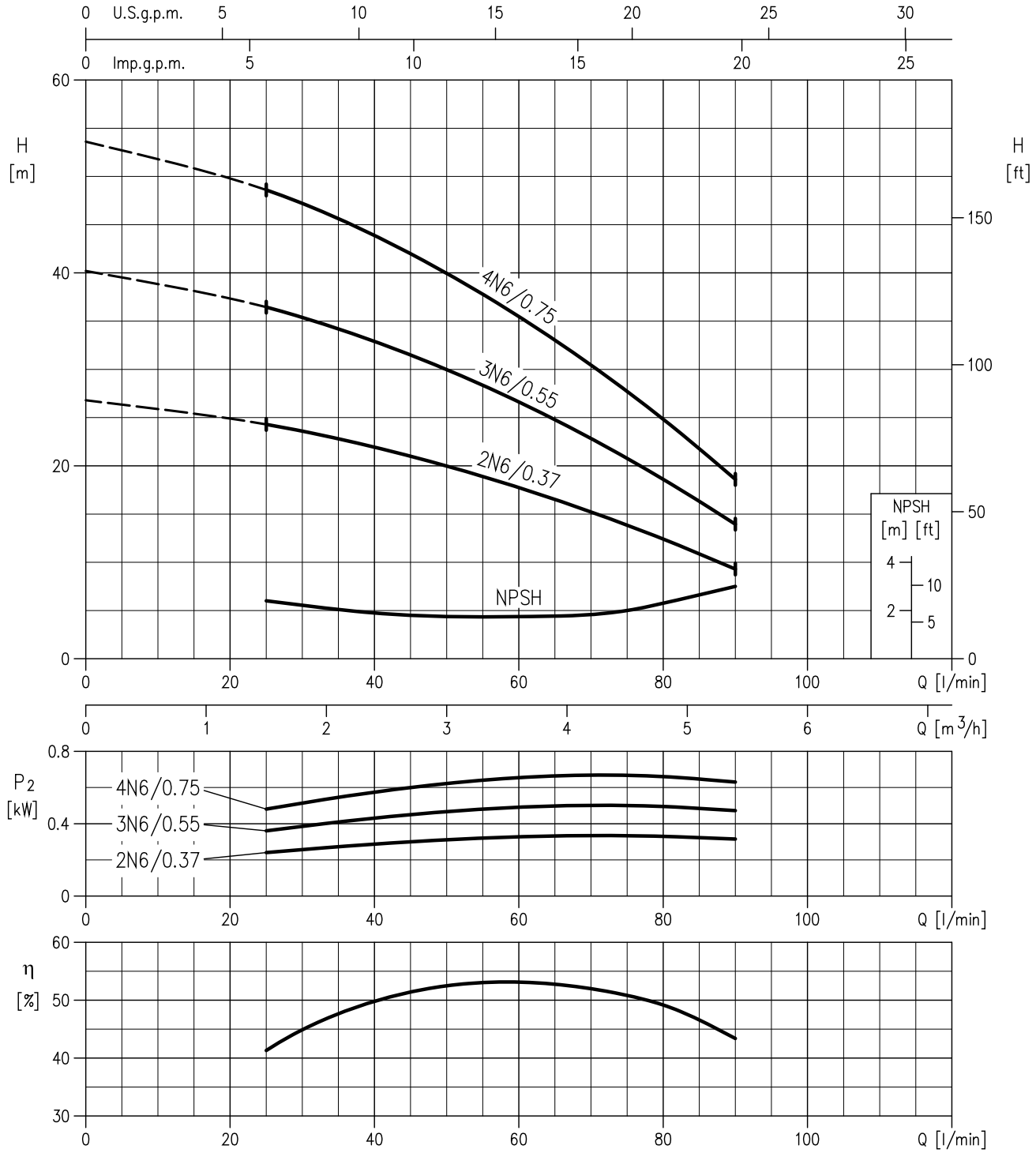

Rotation speed ≈ 34500 min-1
Test standard: ISO 9906 – Annex A

PERFORMANCE CURVE

60Hz

Rev. G

EVM(.) 3 - Impeller diameter = 89 mm

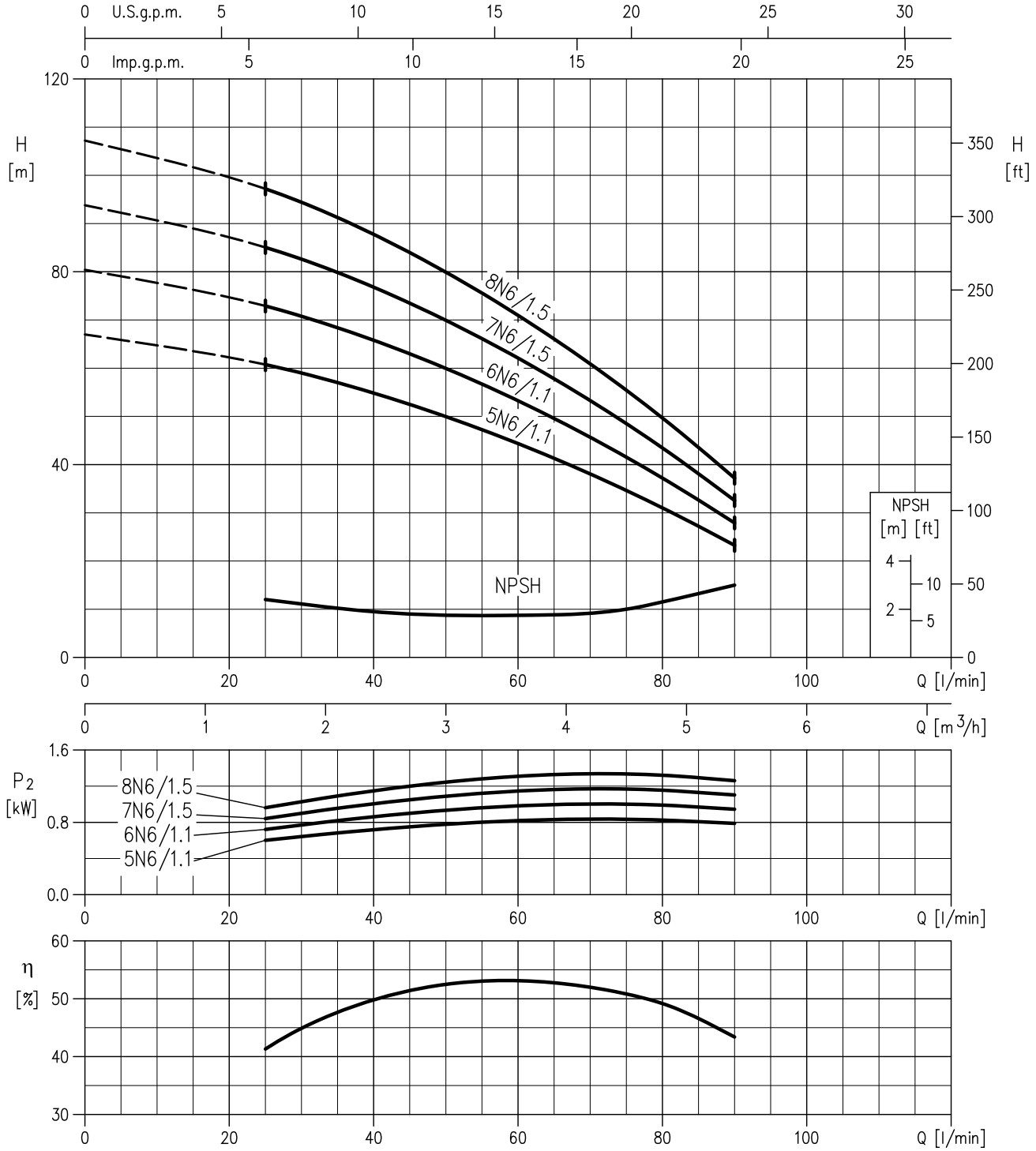

Rotation speed ≈ 3450 min-1
Test standard: ISO 9906 – Annex A

PERFORMANCE CURVE

60Hz

Rev. G

EVM(.) 3 - Impeller diameter = 89 mm

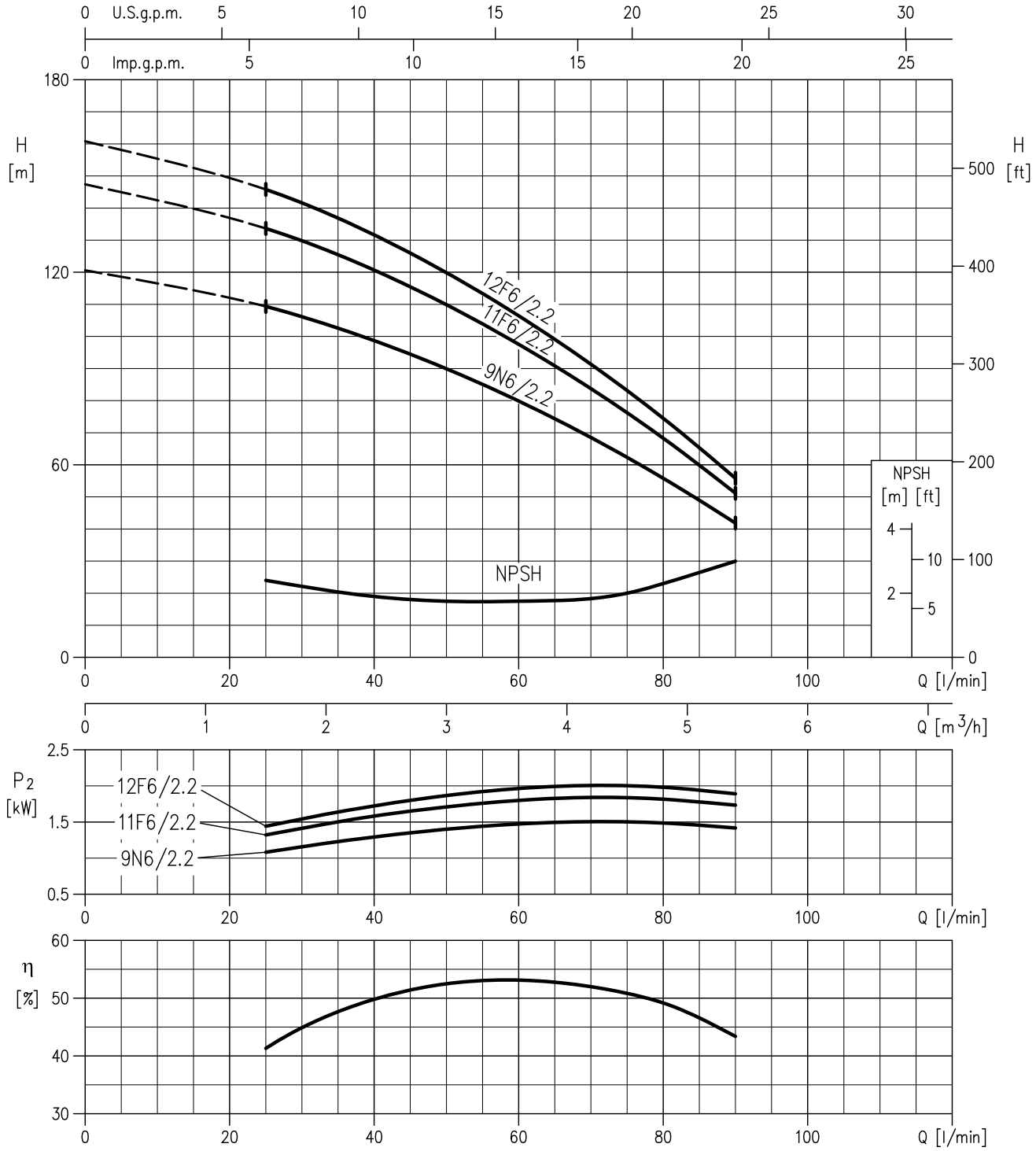

Rotation speed ≈ 3450 min^{-1}
Test standard: ISO 9906 – Annex A

PERFORMANCE CURVE

60Hz

Rev. G

EVM(.) 3 - Impeller diameter = 89 mm

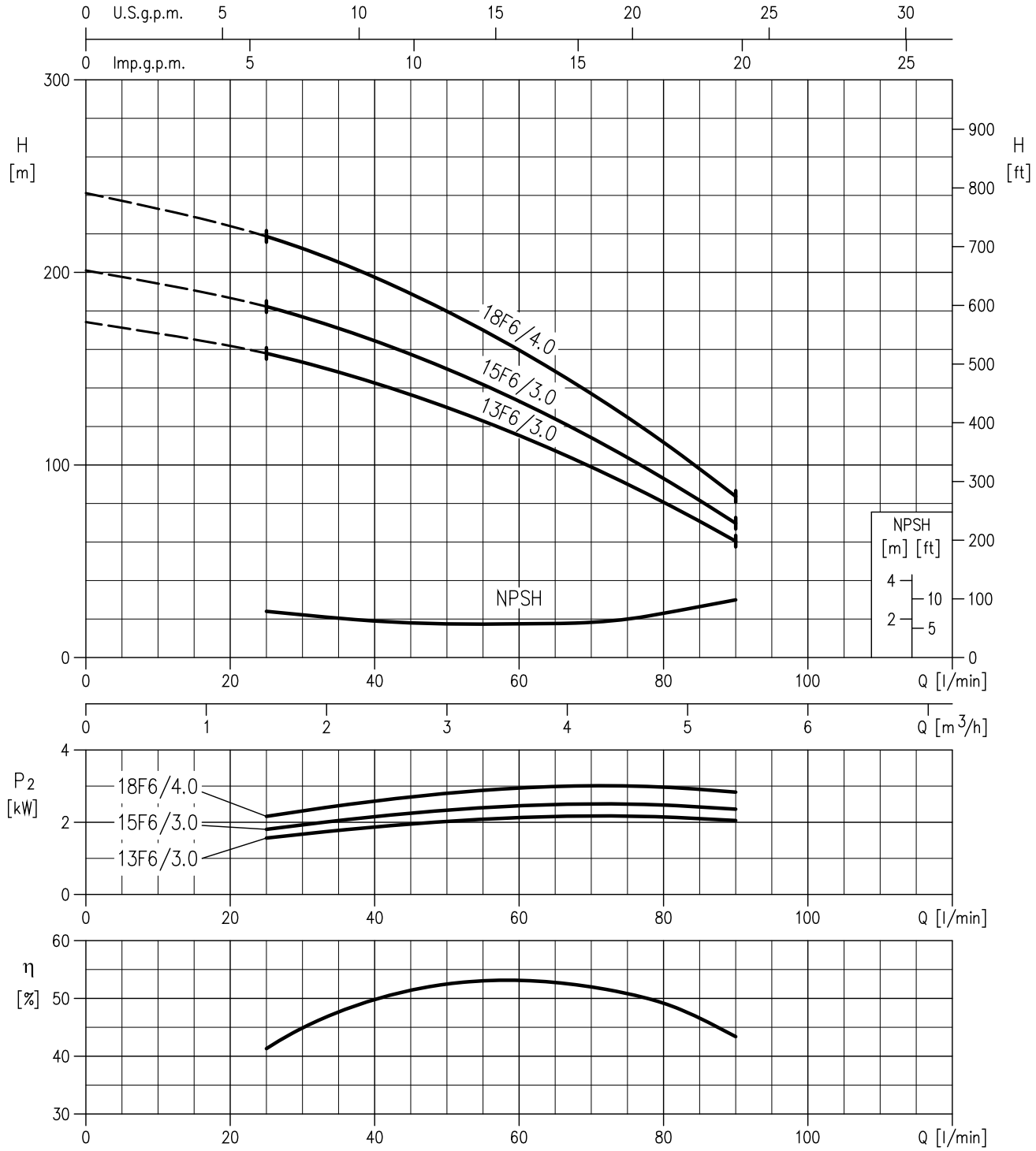

Rotation speed ≈ 3480 min-1
Test standard: ISO 9906 – Annex A

PERFORMANCE CURVE

60Hz

Rev. G

EVM(.) 5 - Impeller diameter = 95 mm

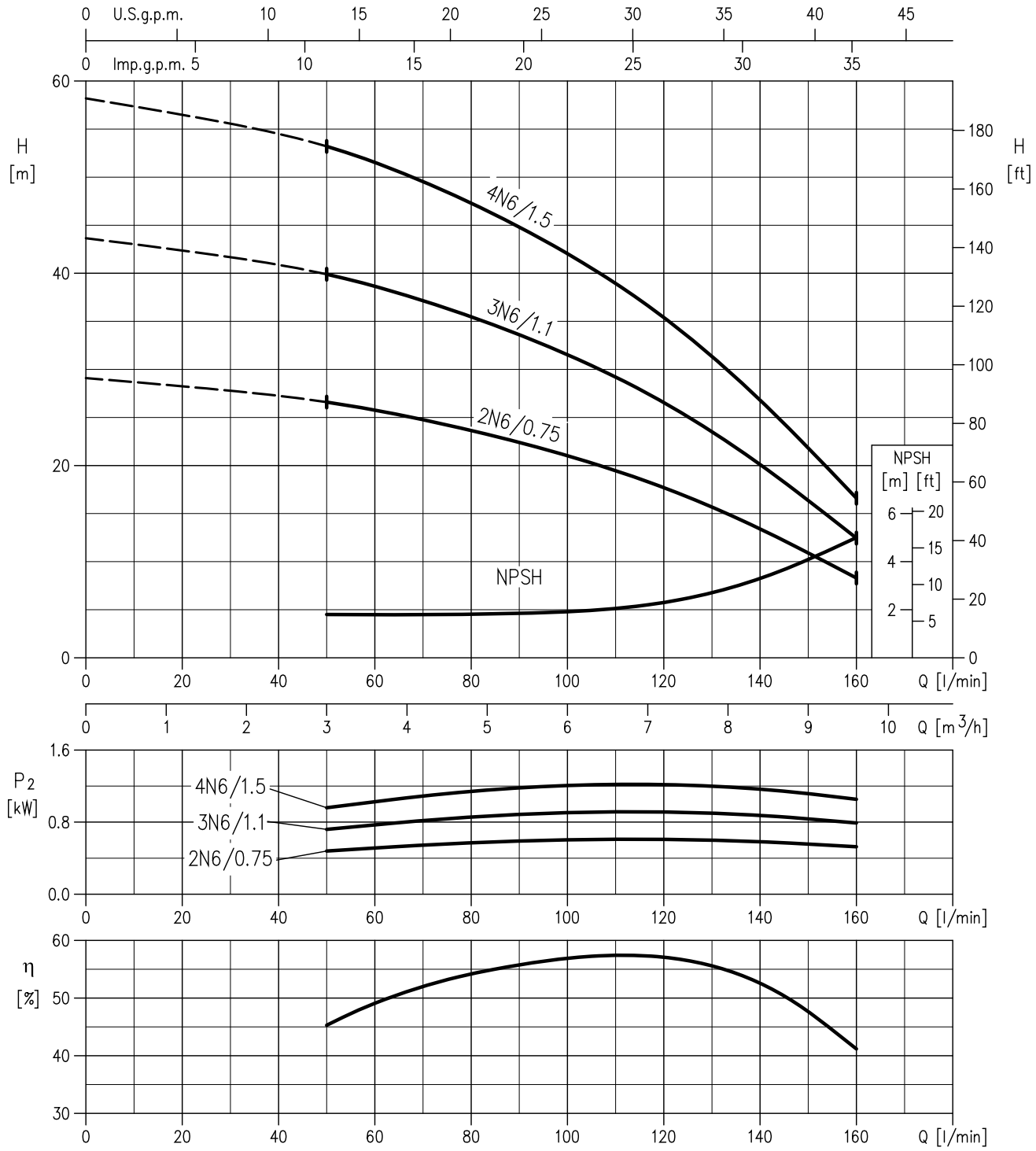

Rotation speed ≈ 3450 min-1
Test standard: ISO 9906 – Annex A

PERFORMANCE CURVE

60Hz

Rev. G

EVM(.) 5 - Impeller diameter = 95 mm

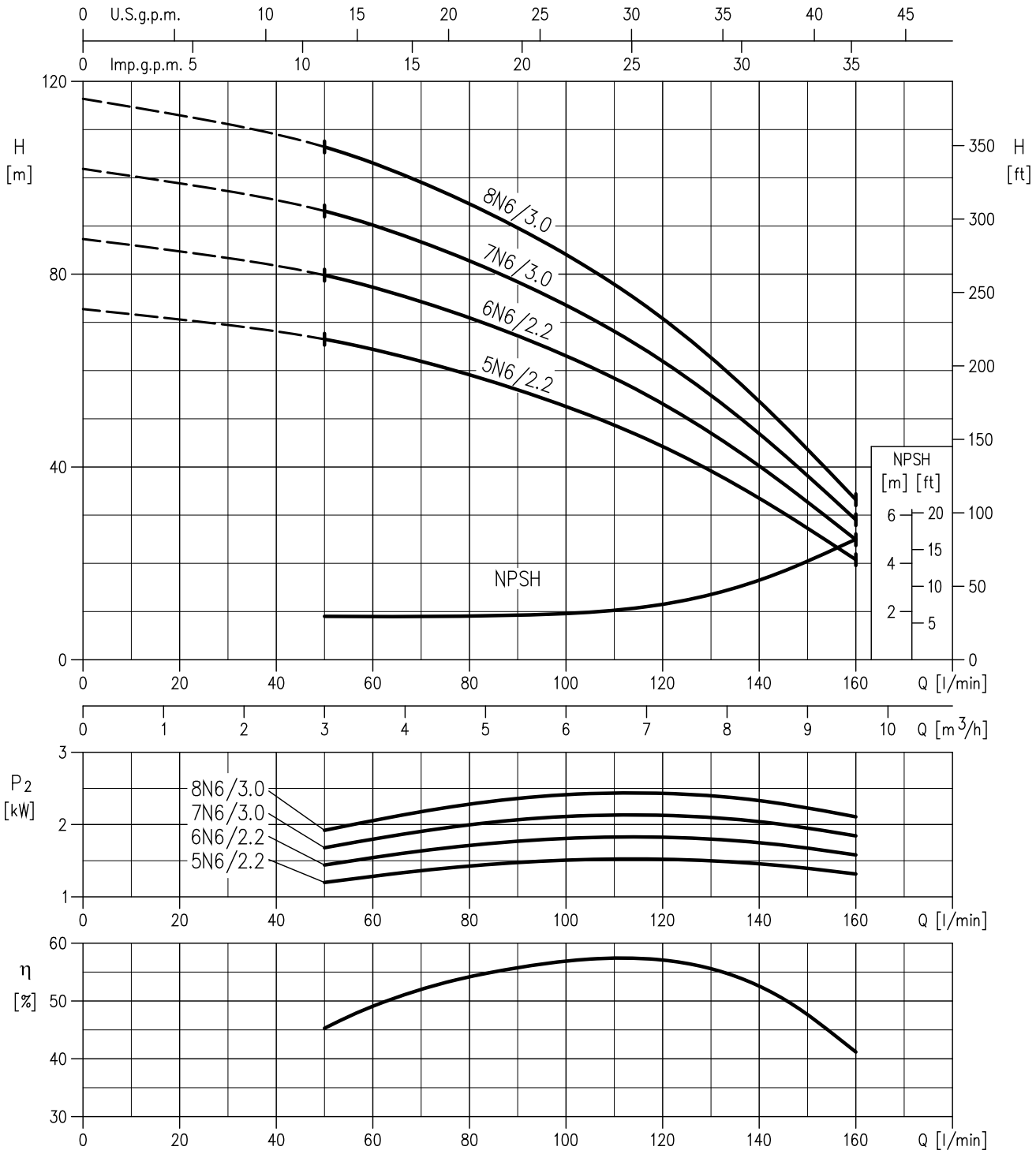

Rotation speed ≈ 3490 min-1
Test standard: ISO 9906 – Annex A

PERFORMANCE CURVE

60Hz

Rev. G

EVM(.) 5 - Impeller diameter = 95 mm

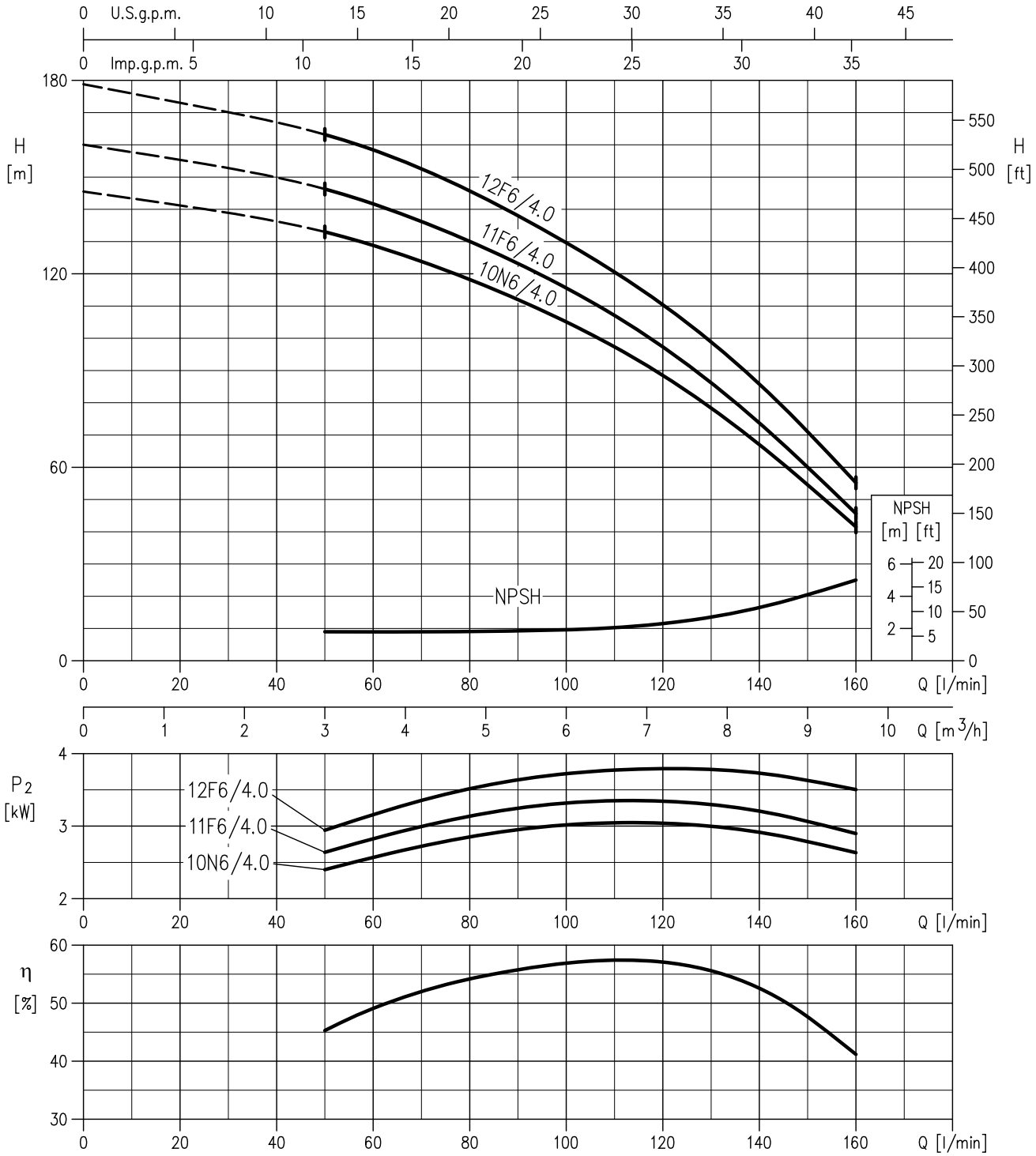

Rotation speed ≈ 3450 min-1
Test standard: ISO 9906 – Annex A

PERFORMANCE CURVE

60Hz

Rev. G

EVM(.) 5 - Impeller diameter = 95 mm

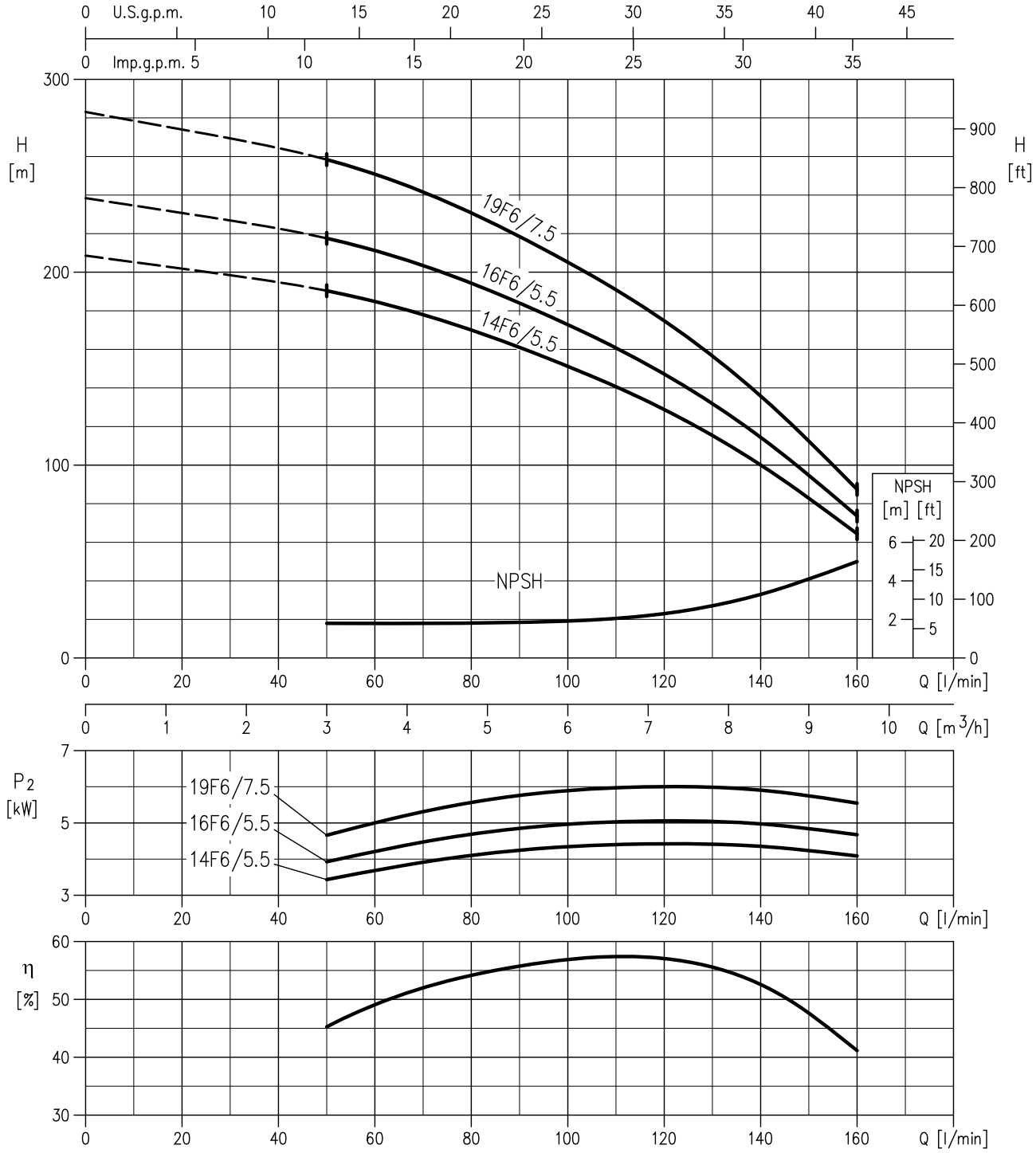

Rotation speed ≈ 3490 min-1
Test standard: ISO 9906 – Annex A

PERFORMANCE CURVE

60Hz

Rev. G

EVM(.) 10 - Impeller diameter = 96 mm

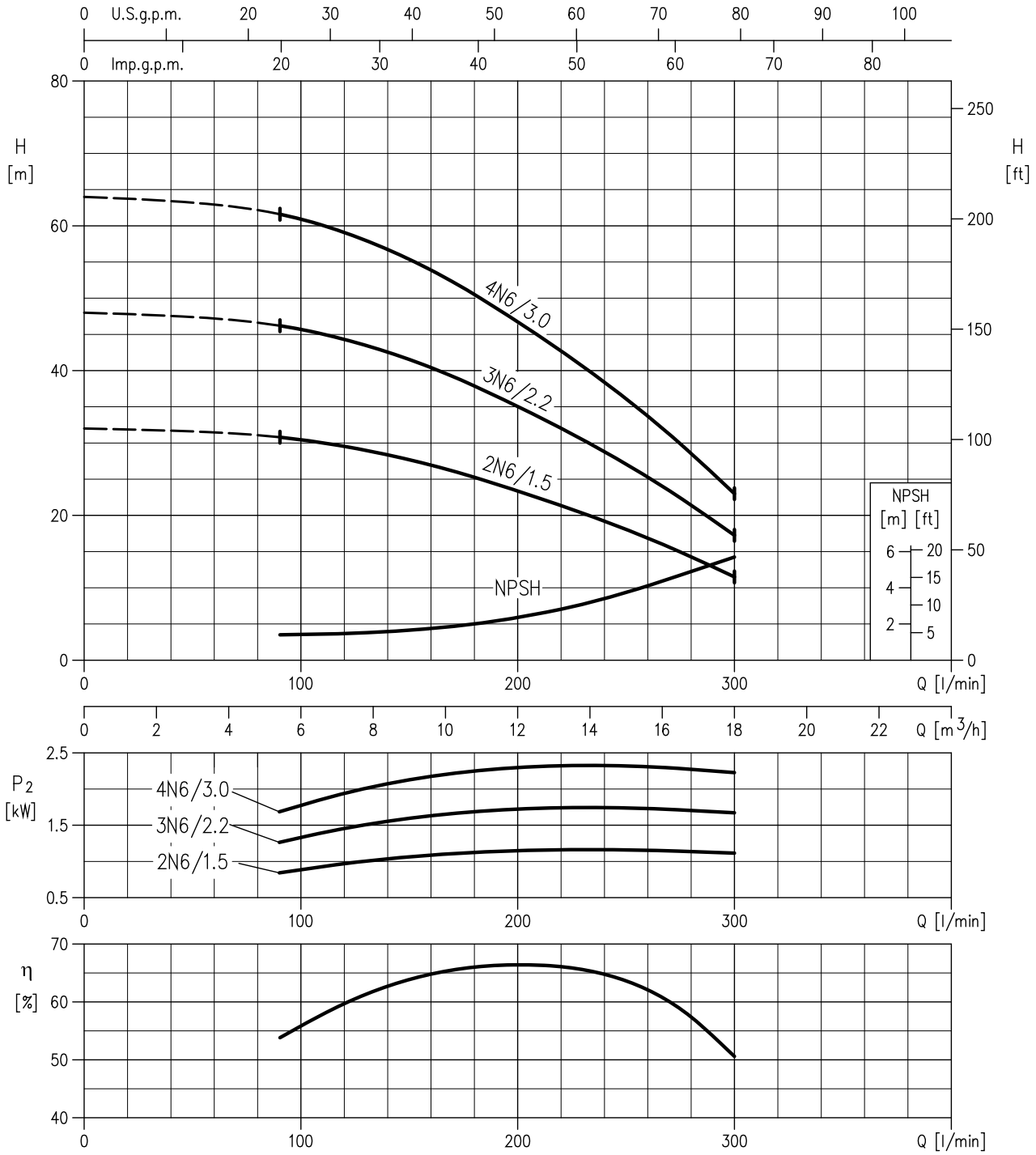

Rotation speed ≈ 3470 min-1
Test standard: ISO 9906 – Annex A

PERFORMANCE CURVE

60Hz

Rev. G

EVM(.) 10 - Impeller diameter = 96 mm

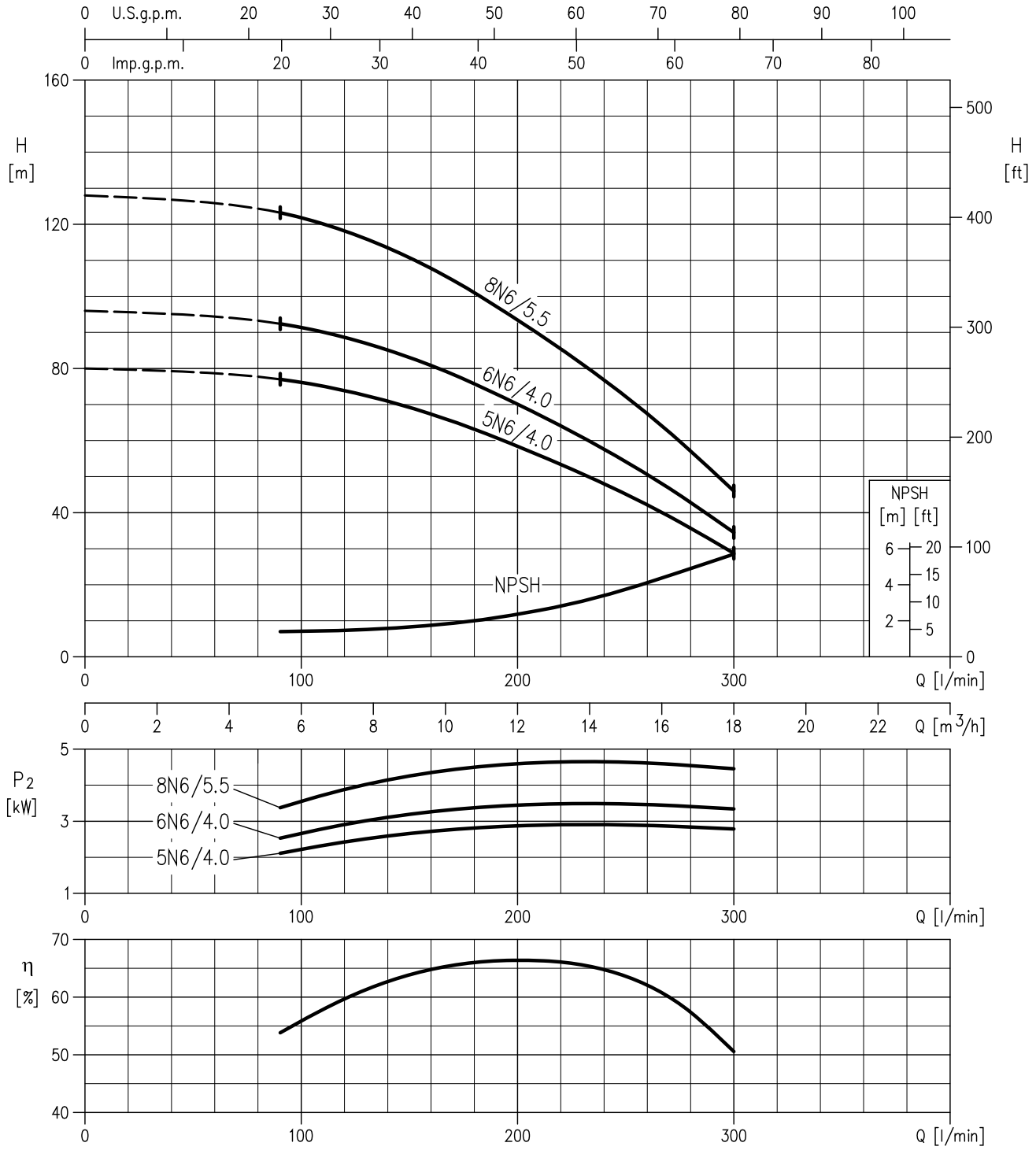

Rotation speed ≈ 3470 min-1
Test standard: ISO 9906 – Annex A

PERFORMANCE CURVE

60Hz

Rev. G

EVM(.) 10 - Impeller diameter = 96 mm

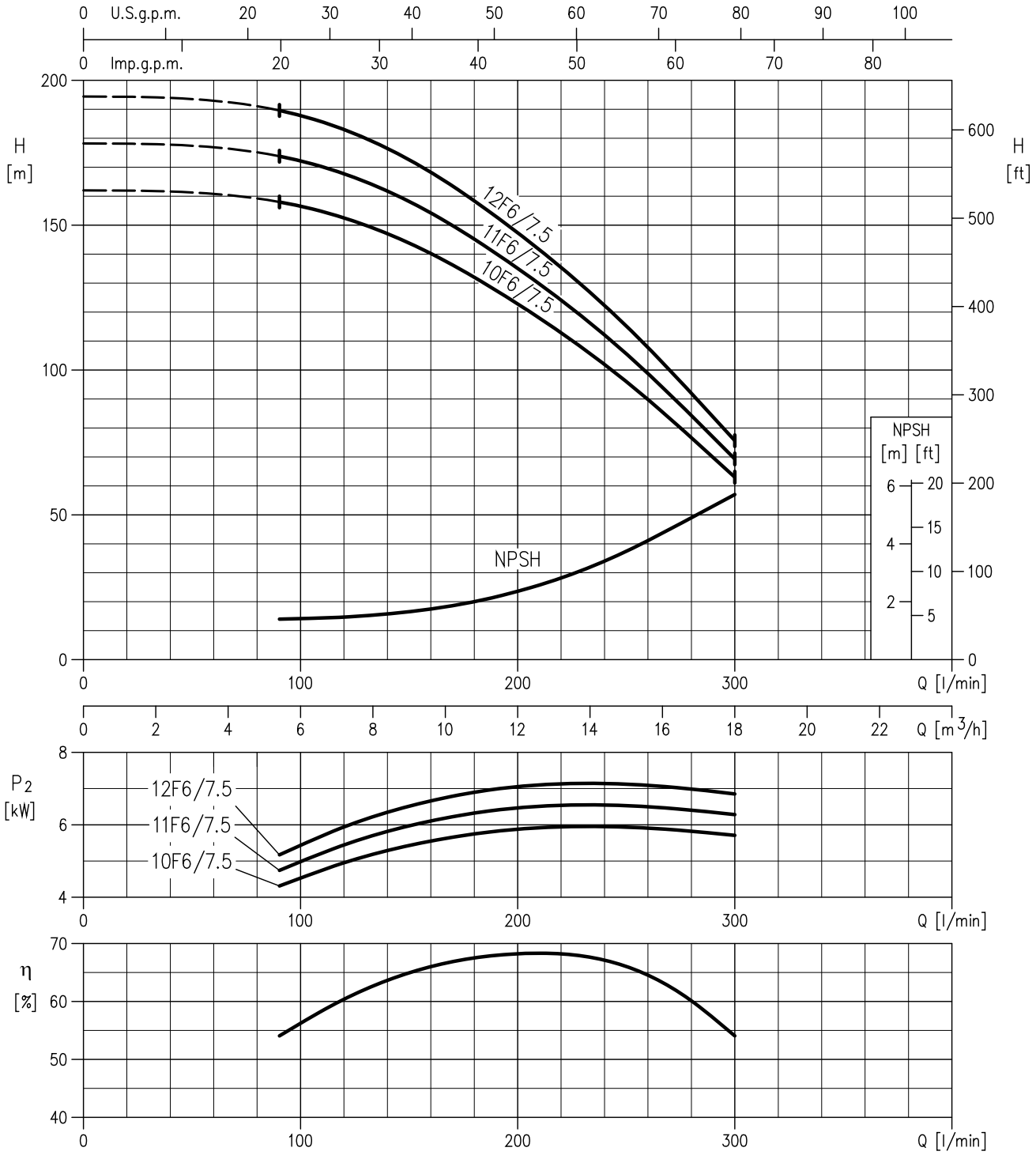

Rotation speed ≈ 3500 min-1
Test standard: ISO 9906 – Annex A

PERFORMANCE CURVE

60Hz

Rev. G

EVM(.) 10 - Impeller diameter = 96 mm

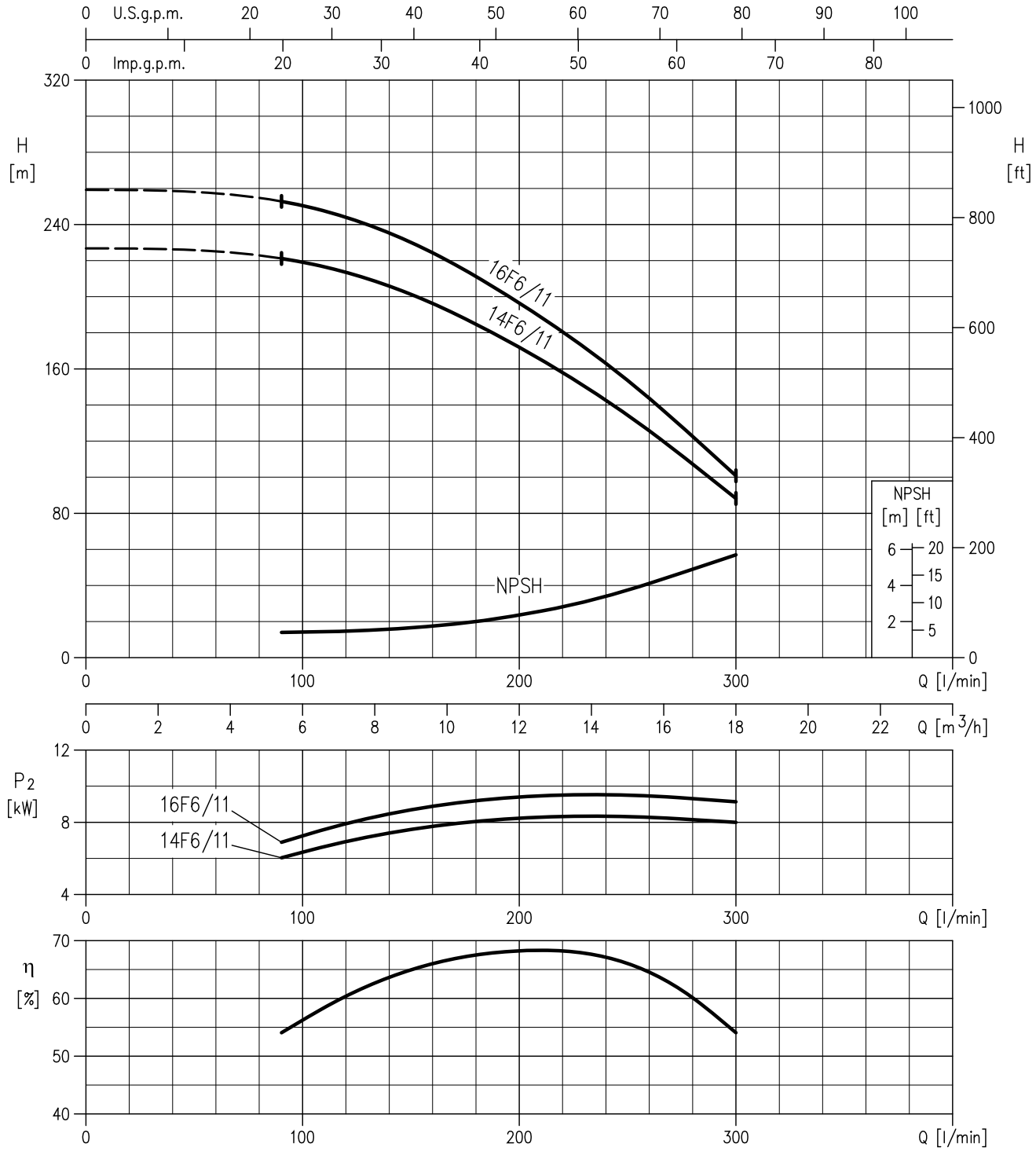

Rotation speed ≈ 3520 min-1
Test standard: ISO 9906 – Annex A

PERFORMANCE CURVE

60Hz

Rev. G

EVM(.) 18 - Impeller diameter = 115 mm

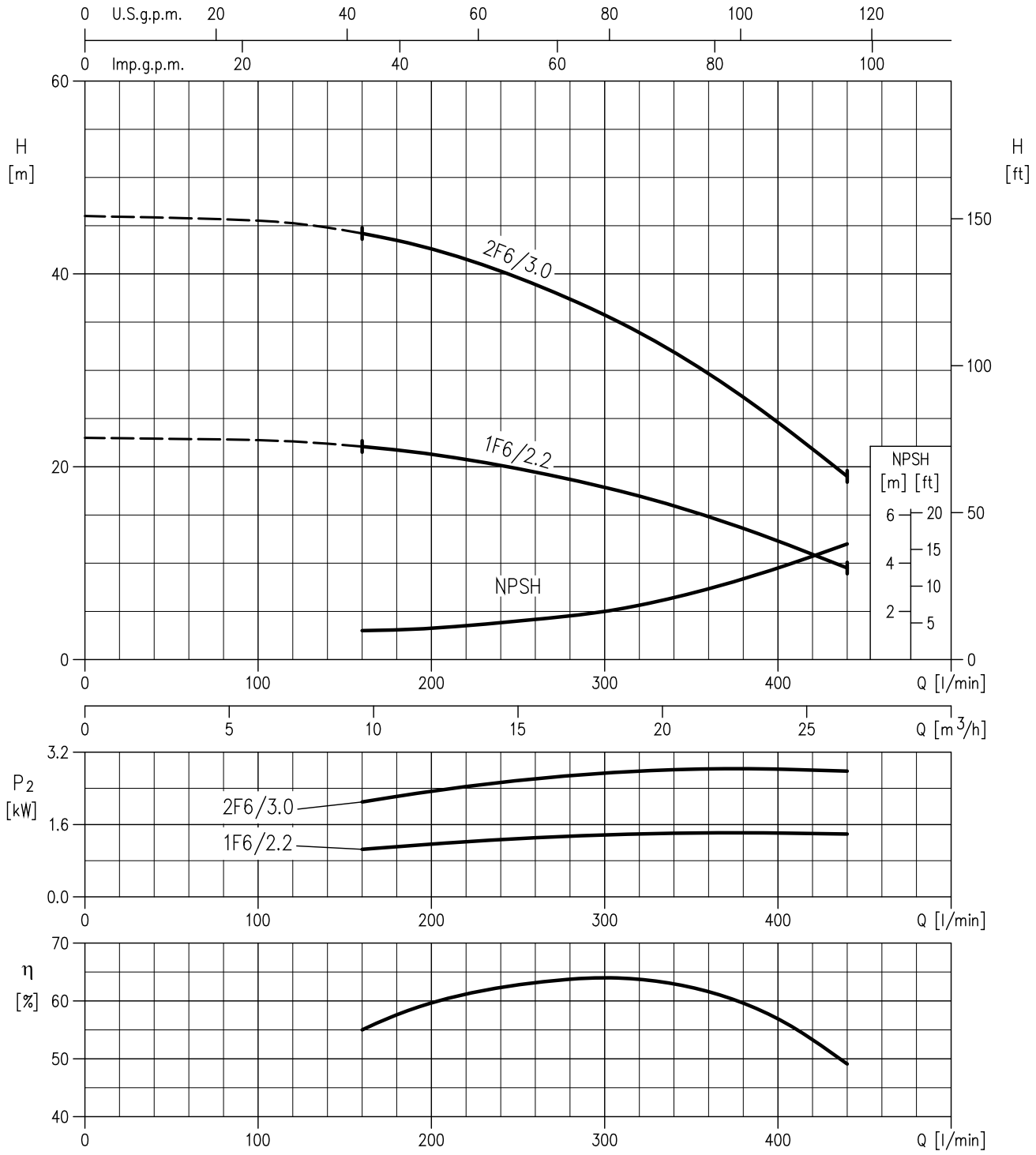

Rotation speed ≈ 3490 min-1
Test standard: ISO 9906 – Annex A

PERFORMANCE CURVE

60Hz

Rev. G

EVM(.) 18 - Impeller diameter = 115 mm

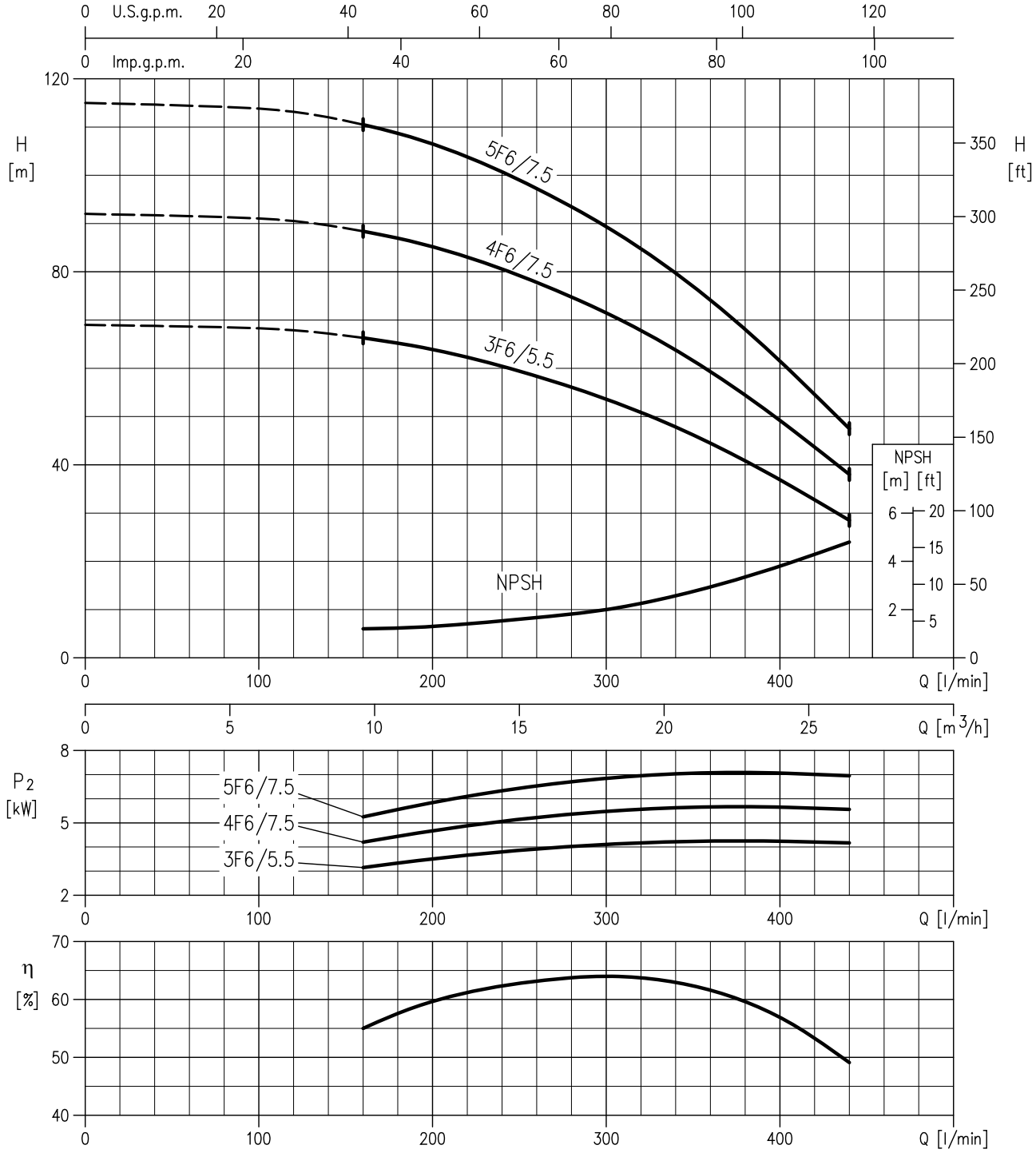

Rotation speed ≈ 3500 min-1
Test standard: ISO 9906 – Annex A

PERFORMANCE CURVE

60Hz

Rev. G

EVM(.) 18 - Impeller diameter = 115 mm

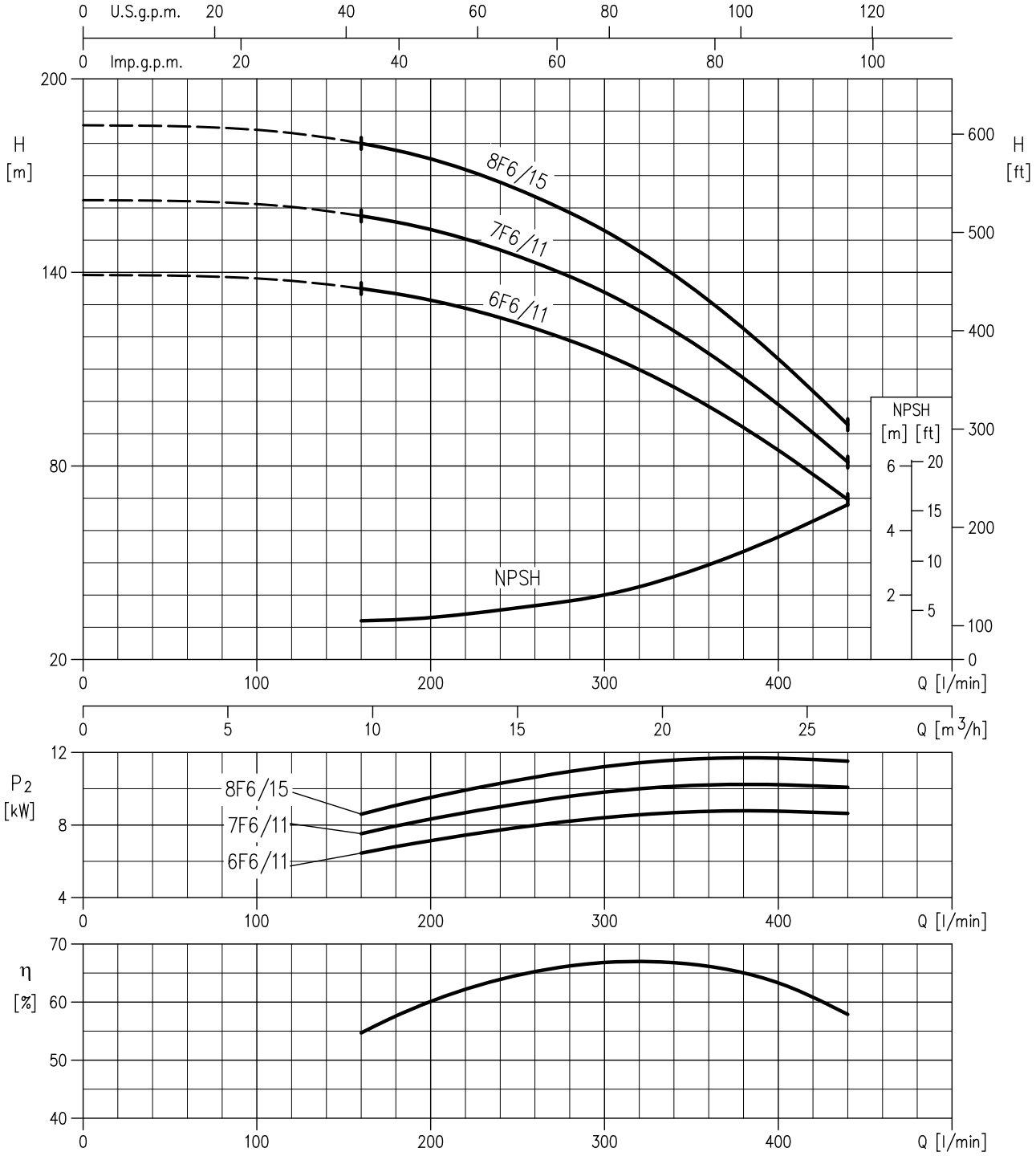

Rotation speed ≈ 3520 min-1
Test standard: ISO 9906 – Annex A

PERFORMANCE CURVE

60Hz

Rev. G

EVM(.) 18 - Impeller diameter = 115 mm

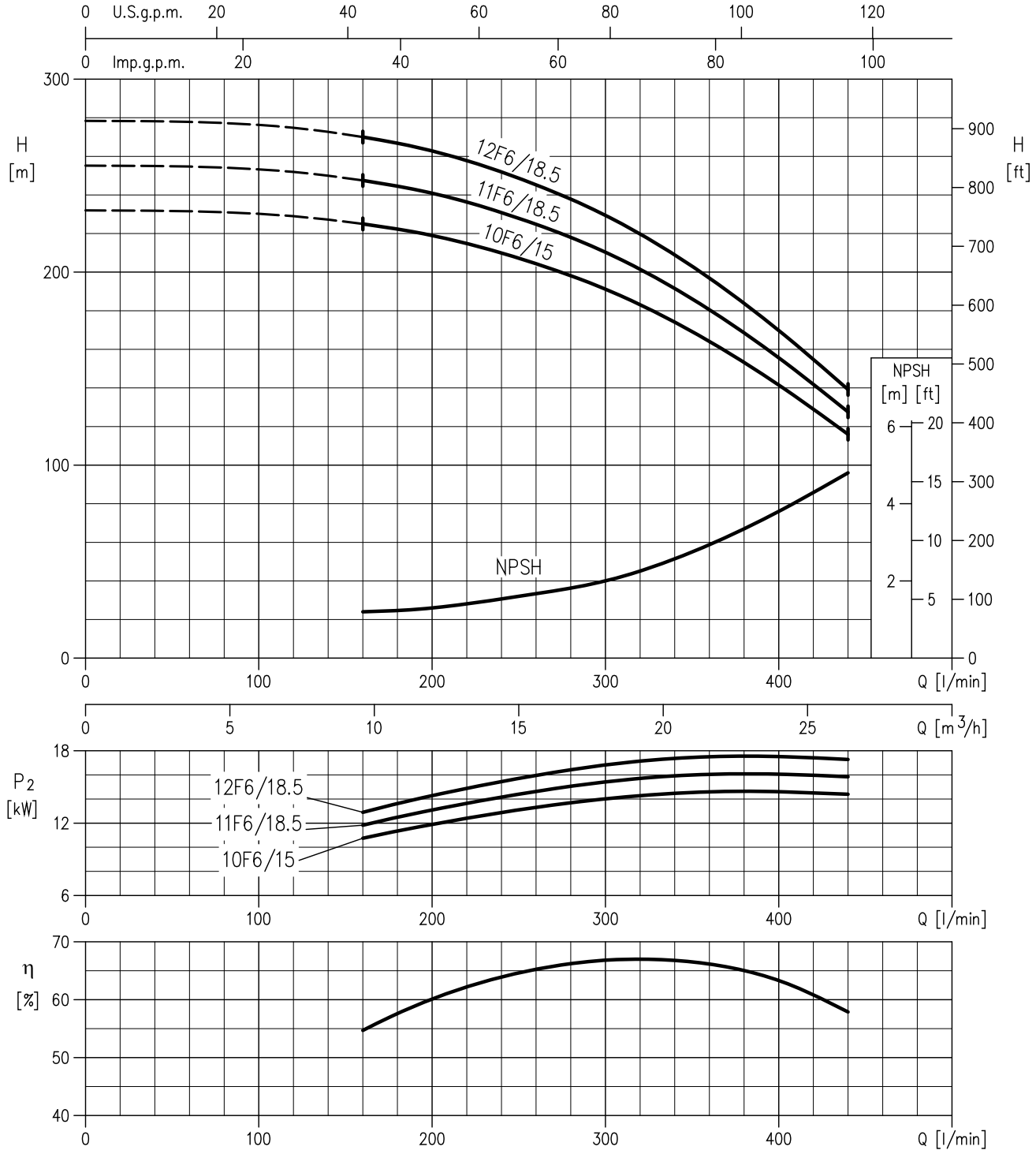

Rotation speed ≈ 3520 min-1
Test standard: ISO 9906 – Annex A

PERFORMANCE CURVE

60Hz

Rev. G

EVM(.) 32 1-0 F6/4.0 (4.0 kW) - no.1 impeller diameter = 136 mm
EVM(.) 32 2-2F6/5.5 (5.5 kW) - no.2 impellers diameter = 125 mm
EVM(.) 32 2-0 F6/7.5 (7.5 kW) - no.2 impellers diameter = 136 mm

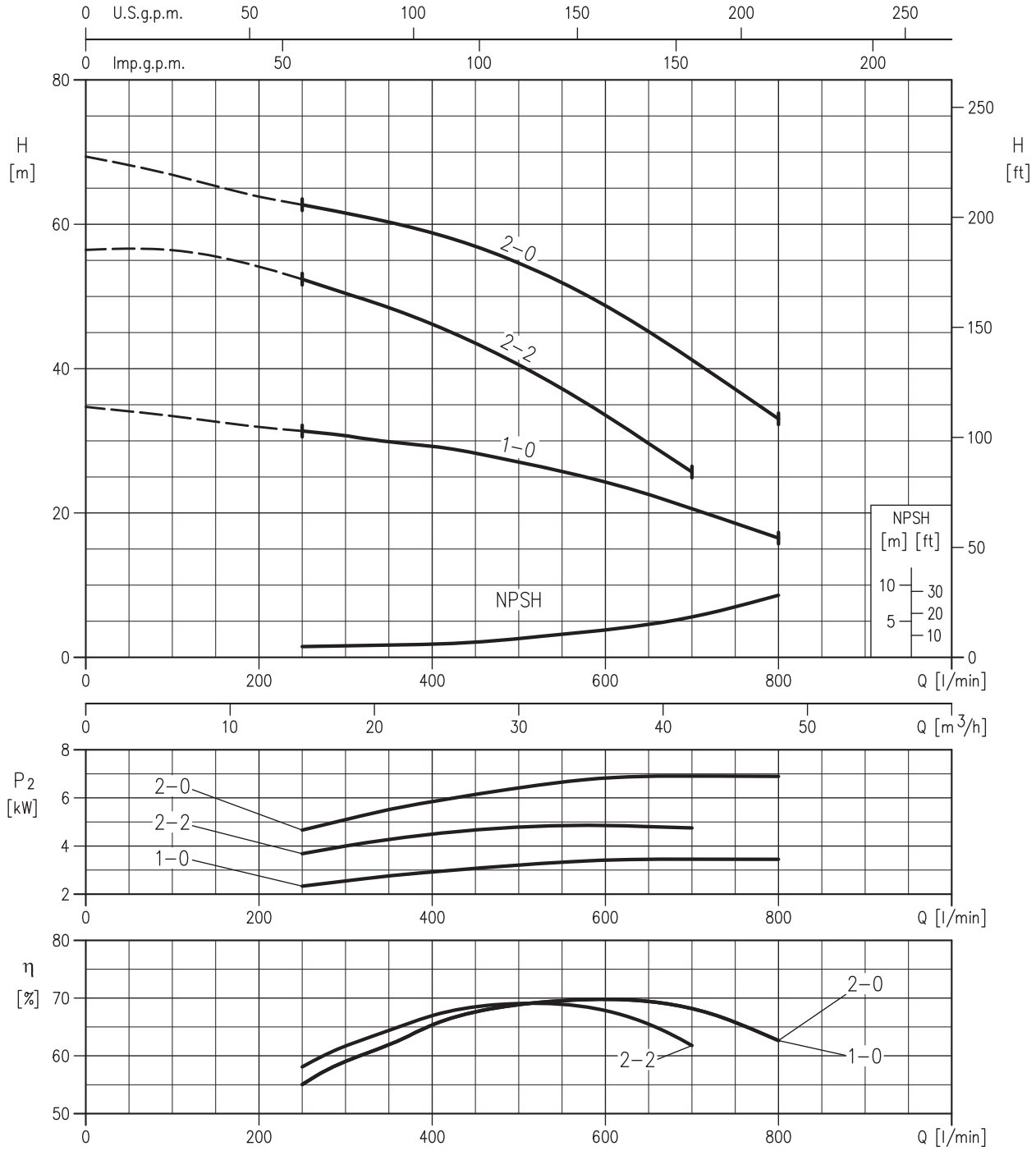

Rotation speed ≈ 3480 min-1
Test standard: ISO 9906 – Annex A

PERFORMANCE CURVE

60Hz

Rev. G

EVM(.) 32 3-3 F6/7.5 (7.5kW) - no.3 impellers diameter = 125 mm
EVM(.) 32 3-0 F6/11 (11kW) - no.3 impellers diameter = 136 mm
EVM(.) 32 4-3 F6/11 (11kW) - no.1 impeller diameter = 136 mm / no.3 impellers diameter= 125 mm
EVM(.) 32 4-0 F6/15 (15kW) - no.4 impellers diameter = 136 mm

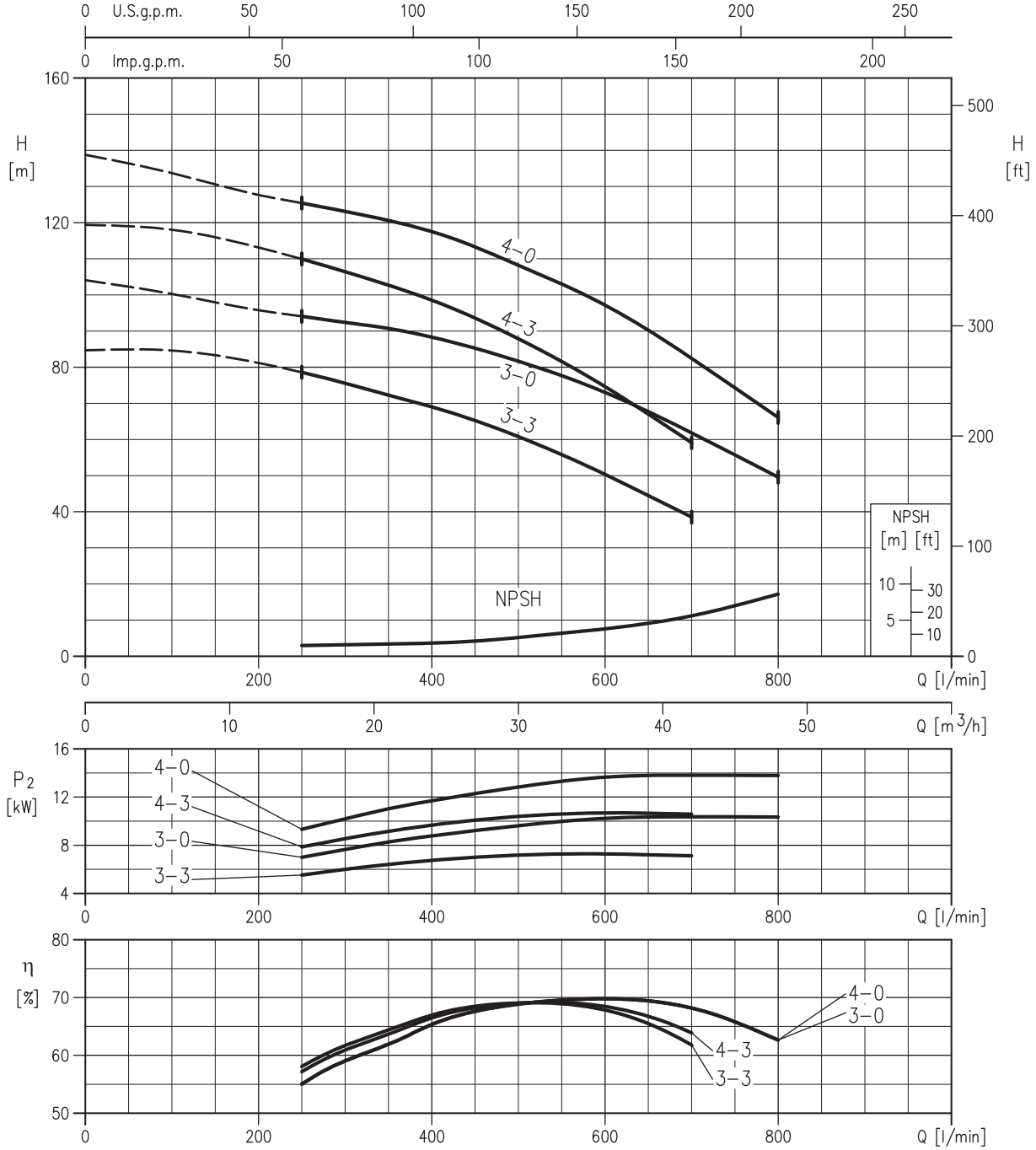

Rotation speed ≈ 3500 min-1
Test standard: ISO 9906 – Annex A

PERFORMANCE CURVE

60Hz

Rev. G

EVM(.) 32 5-3 F6/15 (15kW) - no.2 impellers diameter = 136 mm / no.3 impellers diameter= 125 mm
EVM(.) 32 5-2 F6/15 (15kW) - no.3 impellers diameter = 136 mm / no.2 impeller diameter= 125 mm
EVM(.) 32 5-0 F6/18.5 (18.5kW) - no.5 impellers diameter = 136 mm

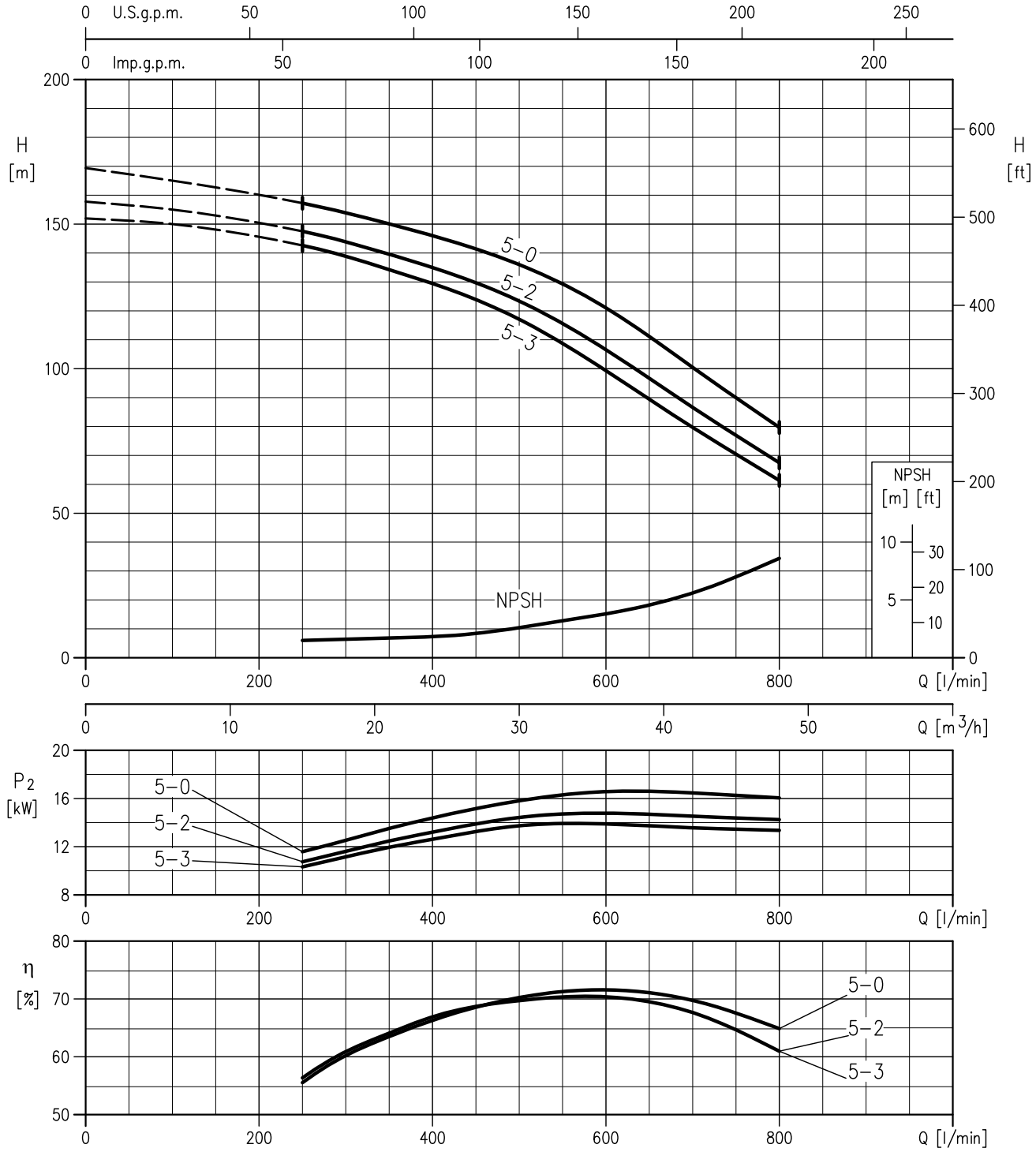

Rotation speed ≈ 3500 min-1
Test standard: ISO 9906 – Annex A

PERFORMANCE CURVE

60Hz

Rev. G

EVM(.) 32 6-3 F6/18.5 (18.5kW) - no.3 impellers diameter = 136 mm / no.3 impellers diameter= 125 mm
EVM(.) 32 6-0 F6/22 (22kW) - no.6 impellers diameter = 136 mm

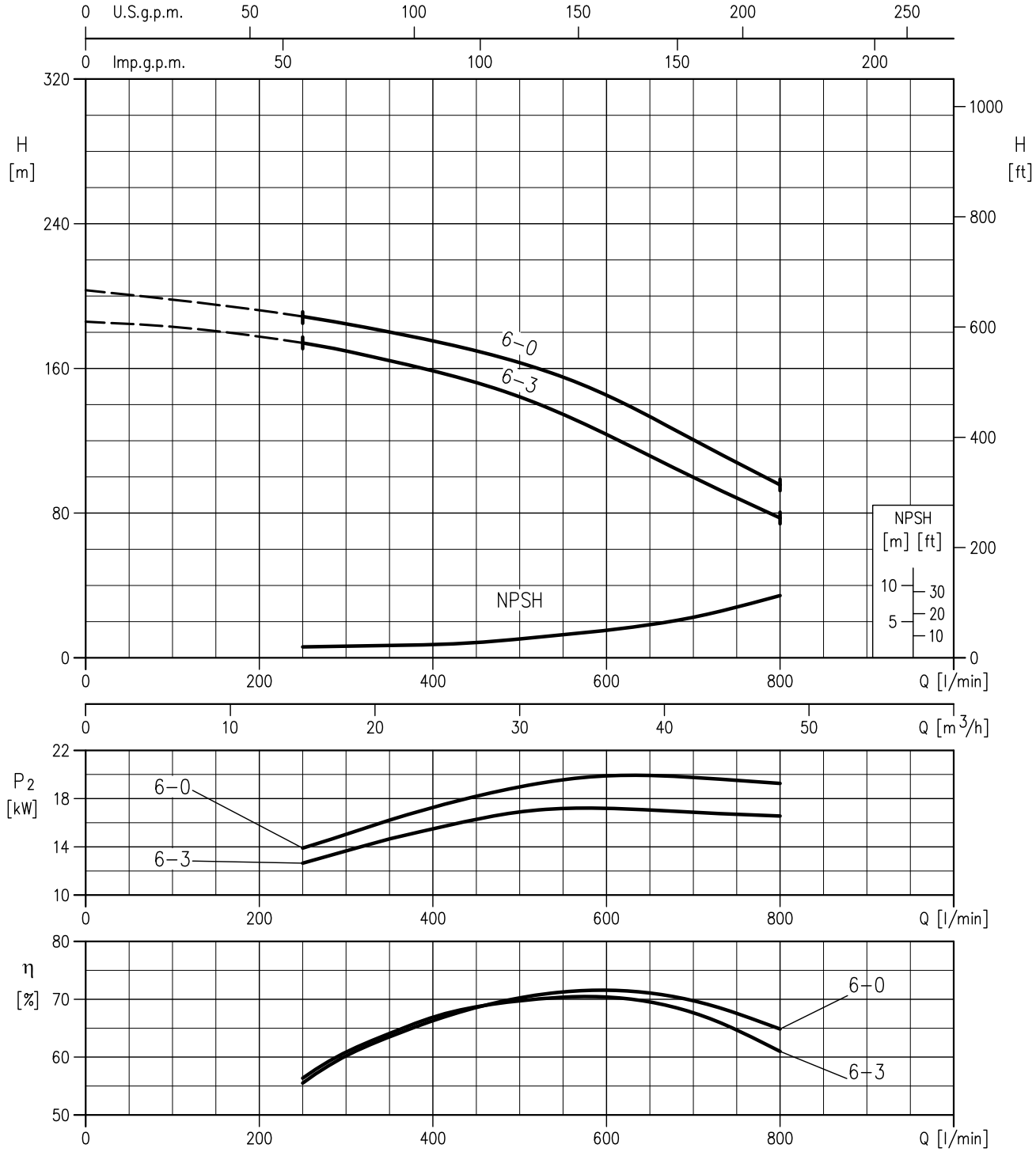

Rotation speed ≈ 3510 min-1
Test standard: ISO 9906 – Annex A

PERFORMANCE CURVE

60Hz

Rev. G

EVM(.) 32 7-3 F6/22 (22kW) - no.4 impellers diameter = 136 mm / no.3 impellers diameter = 125 mm
EVM(.) 32 7-2 F6/22 (22kW) - no.5 impellers diameter = 136 mm / no.2 impeller diameter = 125 mm
EVM(.) 32 7-0 F6/30 (30kW) - no.7 impellers diameter = 136 mm

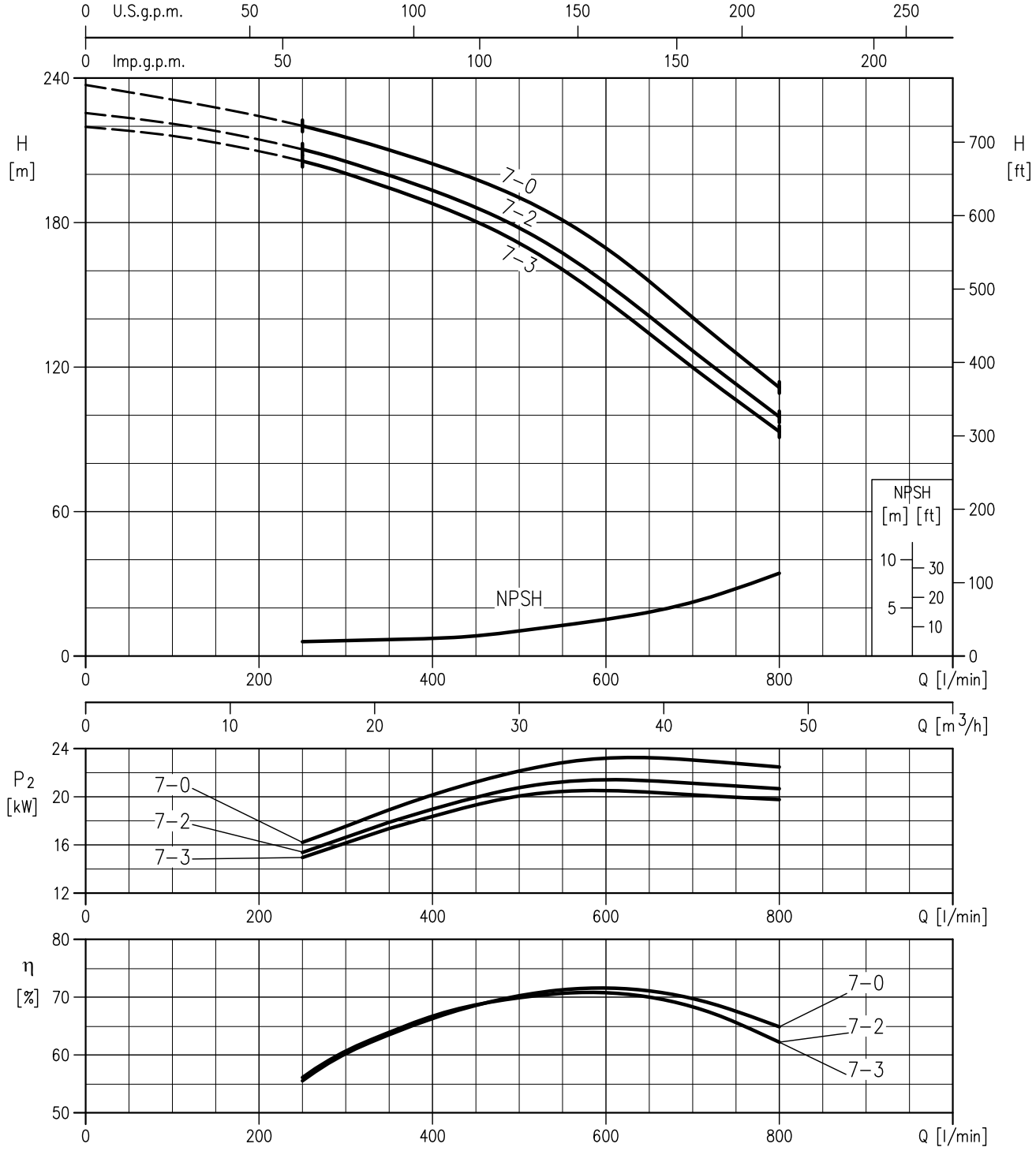

Rotation speed ≈ 3520 min-1
Test standard: ISO 9906 – Annex A

PERFORMANCE CURVE

60Hz

Rev. G

EVM(.) 32 8-3 F6/30 (30kW) - no.5 impellers diameter = 136 mm / no.3 impellers diameter = 125 mm
EVM(.) 32 8-0 F6/30 (30kW) - no.8 impellers diameter = 136 mm

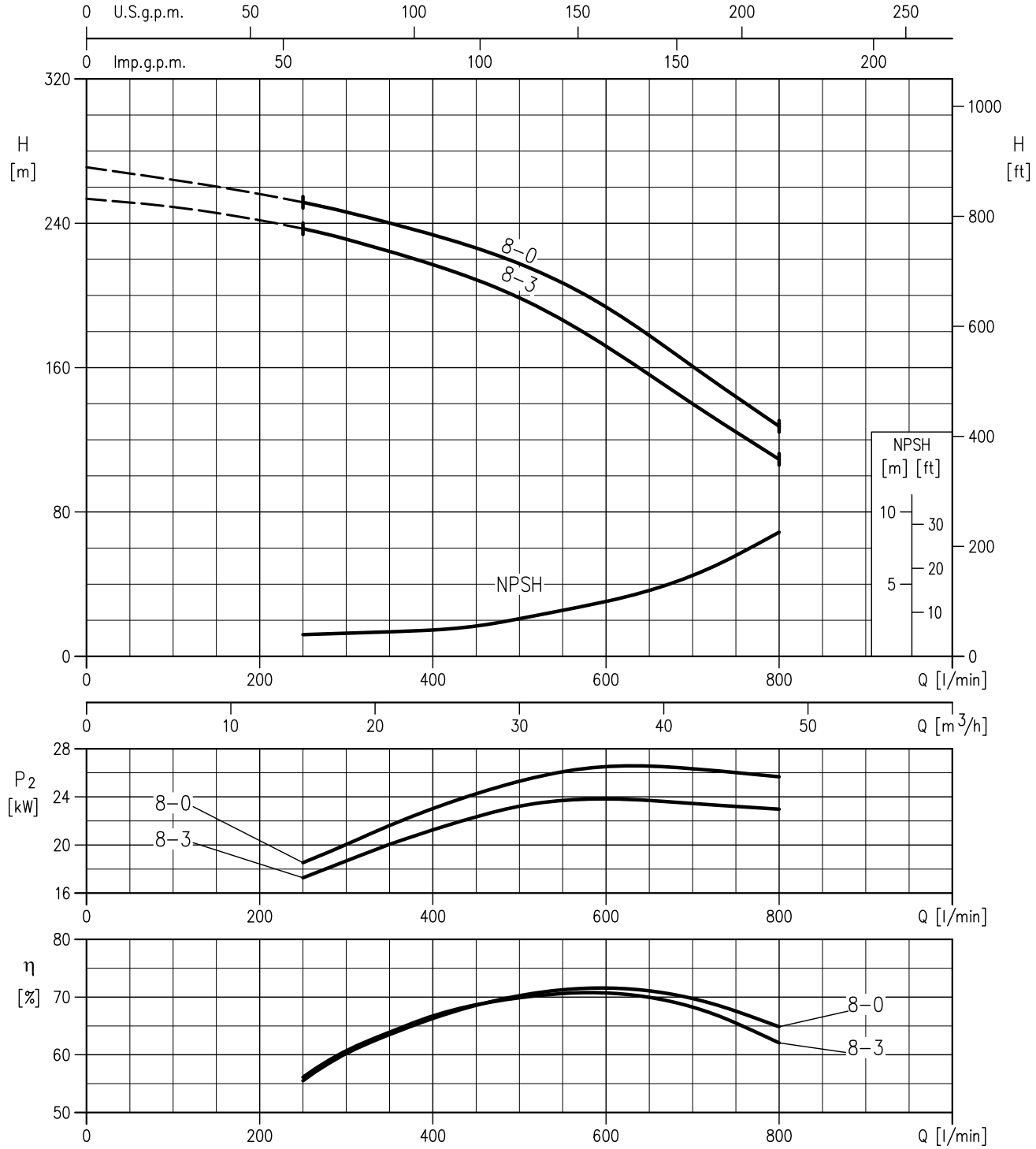

Rotation speed ≈ 3540 min-1
Test standard: ISO 9906 – Annex A

PERFORMANCE CURVE

60Hz

Rev. G

EVM(.) 32 9-3 F6 30/(30kW) - no.6 impellers diameter = 136 mm / no.3 impellers diameter = 125 mm
EVM(.) 32 9-0 F6 30/(30kW) - no.9 impellers diameter= 136 mm
EVM(.) 32 10-4 F6 30/(30kW) - no.6 impellers diameter = 136 mm / no.4 impellers diameter = 125 mm

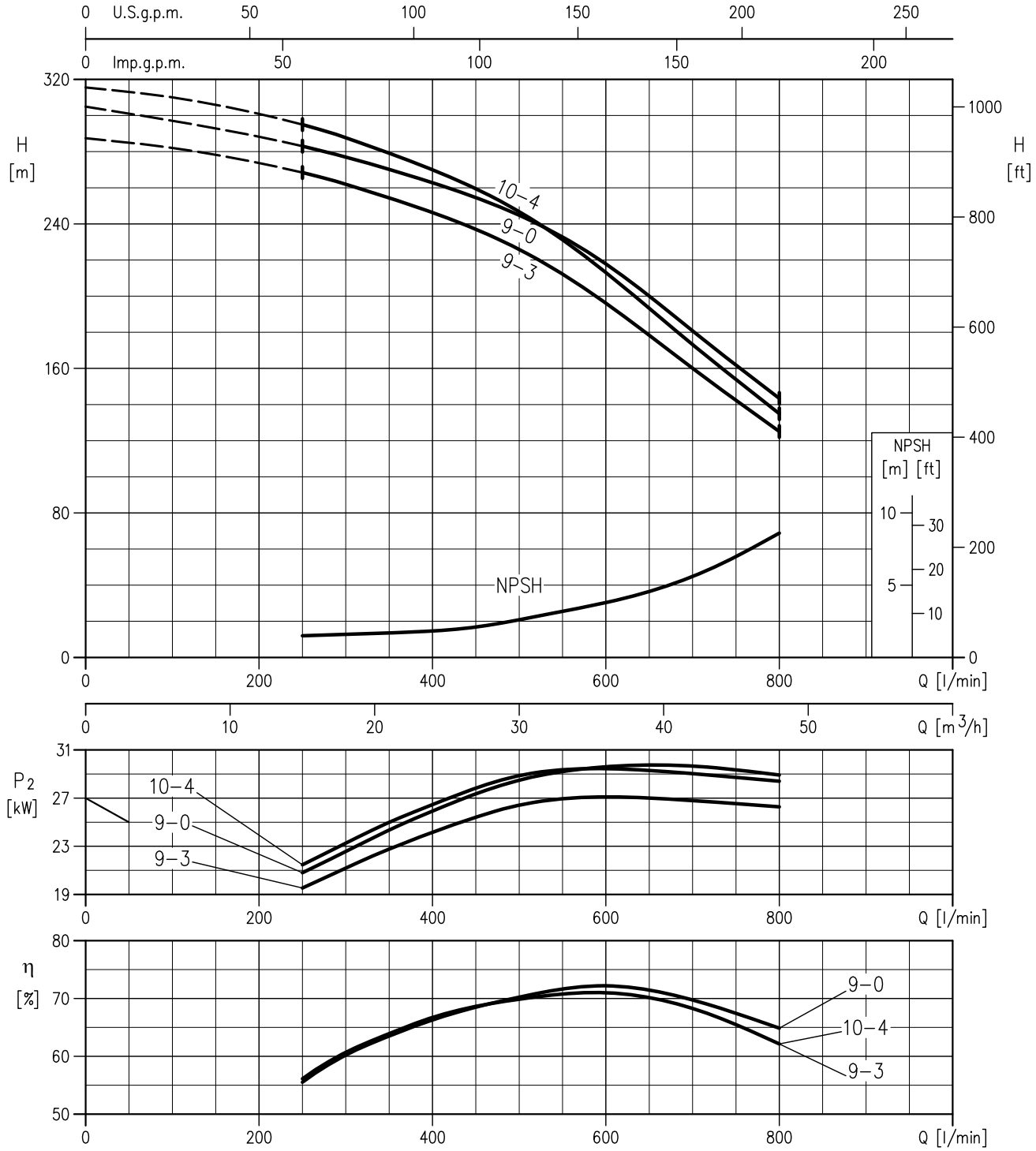

Rotation speed ≈ 3530 min-1
Test standard: ISO 9906 – Annex A

PERFORMANCE CURVE

60Hz

Rev. G

EVM(.) 45 1-1 F6/5.5 (5.5kW) - no.1 impeller diameter = 127 mm
EVM(.) 45 1-0 F6/7.5 (7.5kW) - no.1 impeller diameter = 143 mm

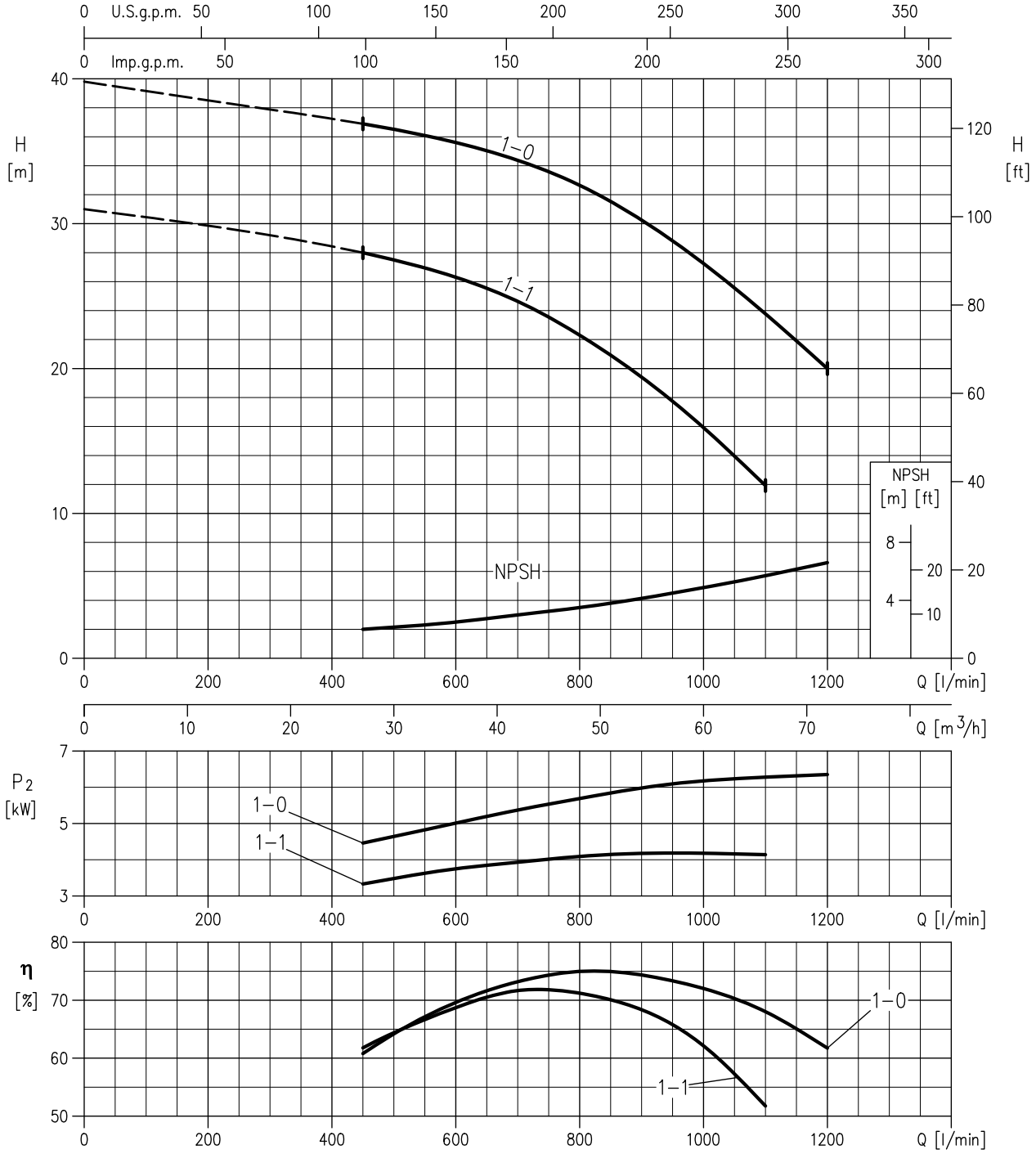

Rotation speed ≈ 3505 min-1
Test standard: ISO 9906 – Annex A

PERFORMANCE CURVE

60Hz

Rev. G

EVM(.) 45 2-2 F6/11 (11kW) - no.2 impellers diameter = 127 mm
EVM(.) 45 2-1 F6/11 (11kW) - no.1 impeller diameter = 143 mm / no.1 impeller diameter = 127 mm
EVM(.) 45 2-0 F6/15 (15kW) - no.2 impellers diameter = 143 mm

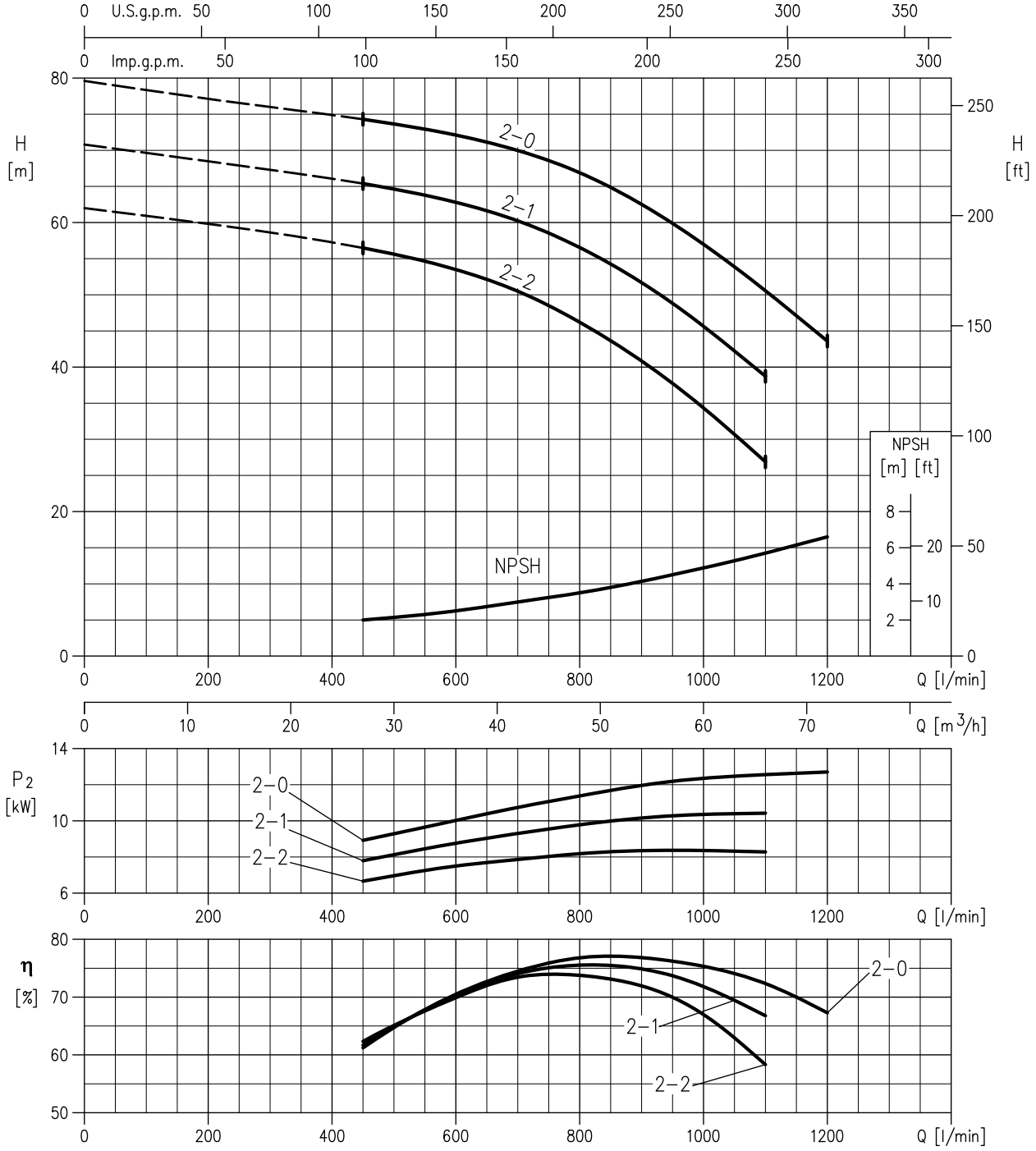

Rotation speed ≈ 3520 min-1
Test standard: ISO 9906 – Annex A

PERFORMANCE CURVE

60Hz

Rev. G

EVM(.) 45 3-3 F6/15 (15kW) - no.3 impellers diameter = 127 mm
EVM(.) 45 3-2 F6/15 (15kW) - no.1 impeller diameter = 143 mm / no.2 impellers diameter = 127 mm
EVM(.) 45 3-1 F6/18.5 (18.5kW) - no.2 impellers diameter= 143 mm / no.1 impeller diameter= 127 mm
EVM(.) 45 3-0 F6/22 (22kW) - no.3 impellers diameter = 143 mm

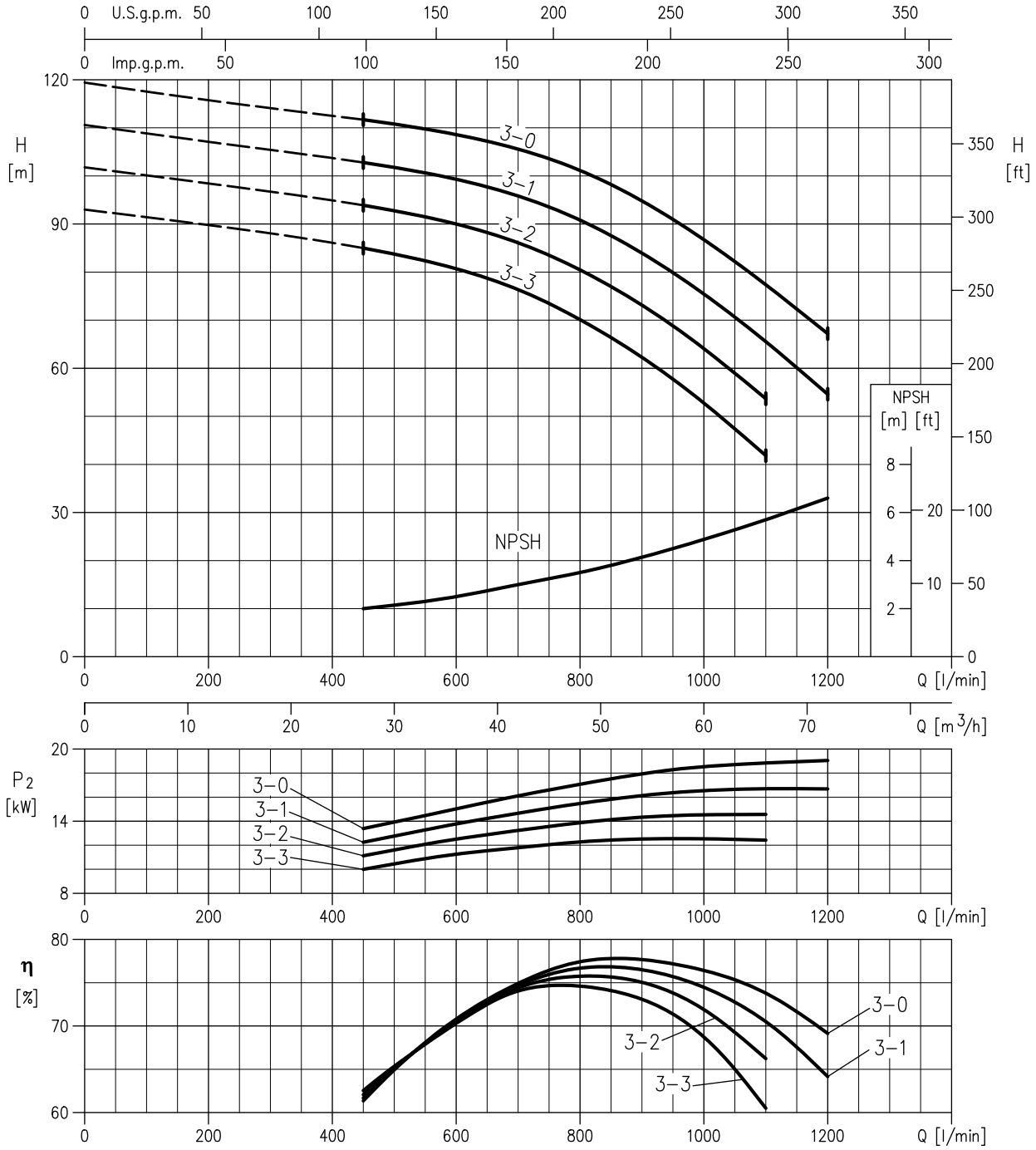

Rotation speed ≈ 3520 min-1
Test standard: ISO 9906 – Annex A

PERFORMANCE CURVE

60Hz

Rev. G

EVM(.) 45 4-3 F6/18.5 (18.5kW) - no.1 impeller diameter= 143 mm / no.3 impellers diameter= 127 mm
EVM(.) 45 4-2 F6/22 (22kW) - no.2 impellers diameter= 143 mm / no.2 impellers diameter = 127 mm
EVM(.) 45 4-1 F6/30 (30kW) - no.3 impellers diameter= 143 mm / no.1 impeller diameter = 127 mm
EVM(.) 45 4-0 F6/30 (30kW) - no.4 impellers diameter = 143 mm

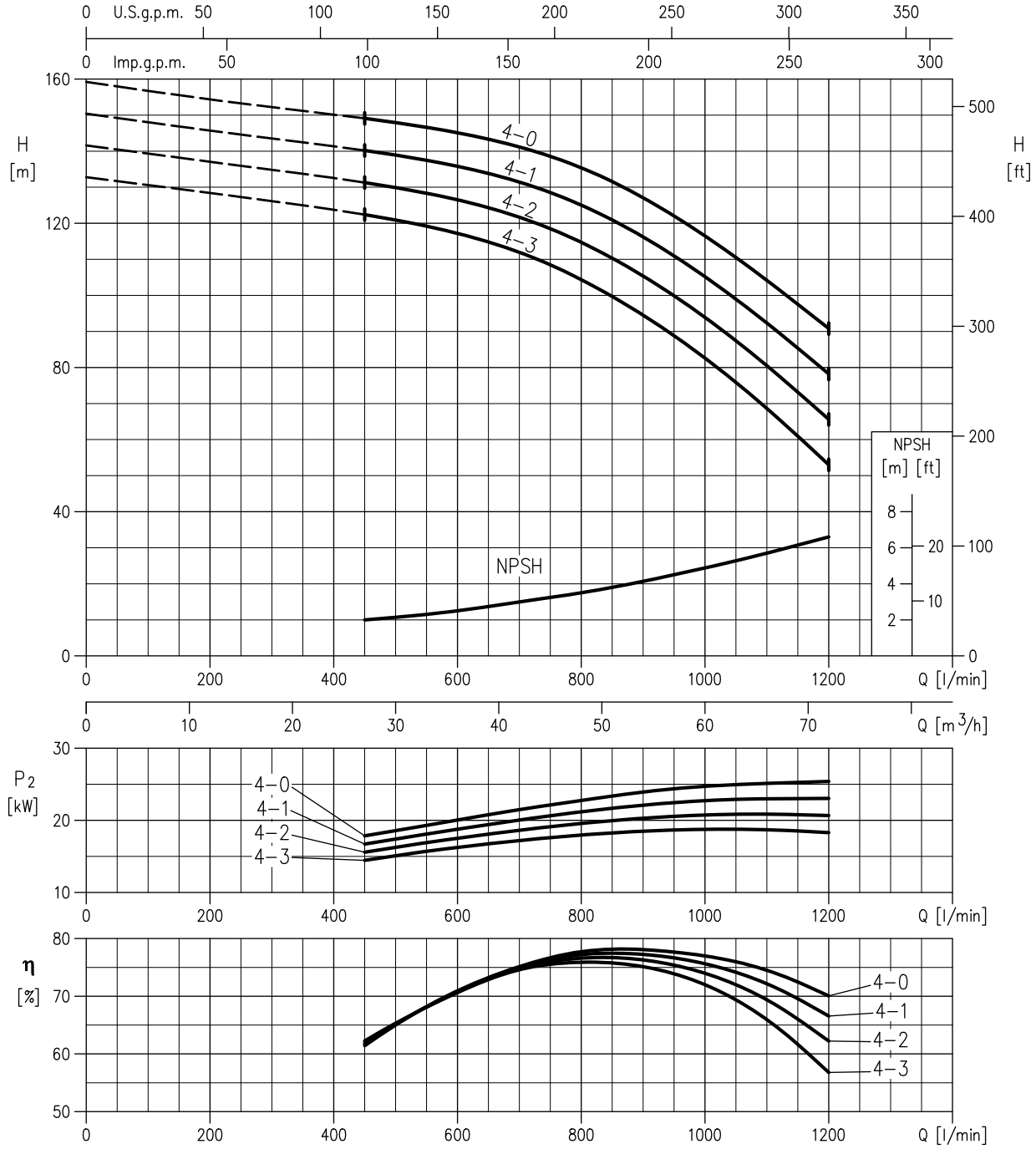

Rotation speed ≈ 3530 min-1
Test standard: ISO 9906 – Annex A

PERFORMANCE CURVE

60Hz

Rev. G

EVM(.) 45 5-3 F6/30 (30kW) - no.2 impellers diameter= 143 mm / no.3 impellers diameter= 127 mm
EVM(.) 45 5-2 F6/30 (30kW) - no.3 impellers diameter= 143 mm / no.2 impellers diameter= 127 mm
EVM(.) 45 5-1 F6/30 (30kW) - no.4 impellers diameter= 143 mm / no.1 impellers diameter= 127 mm
EVM(.) 45 5-0 F6/37 (37kW) - no.5 impellers diameter = 143 mm

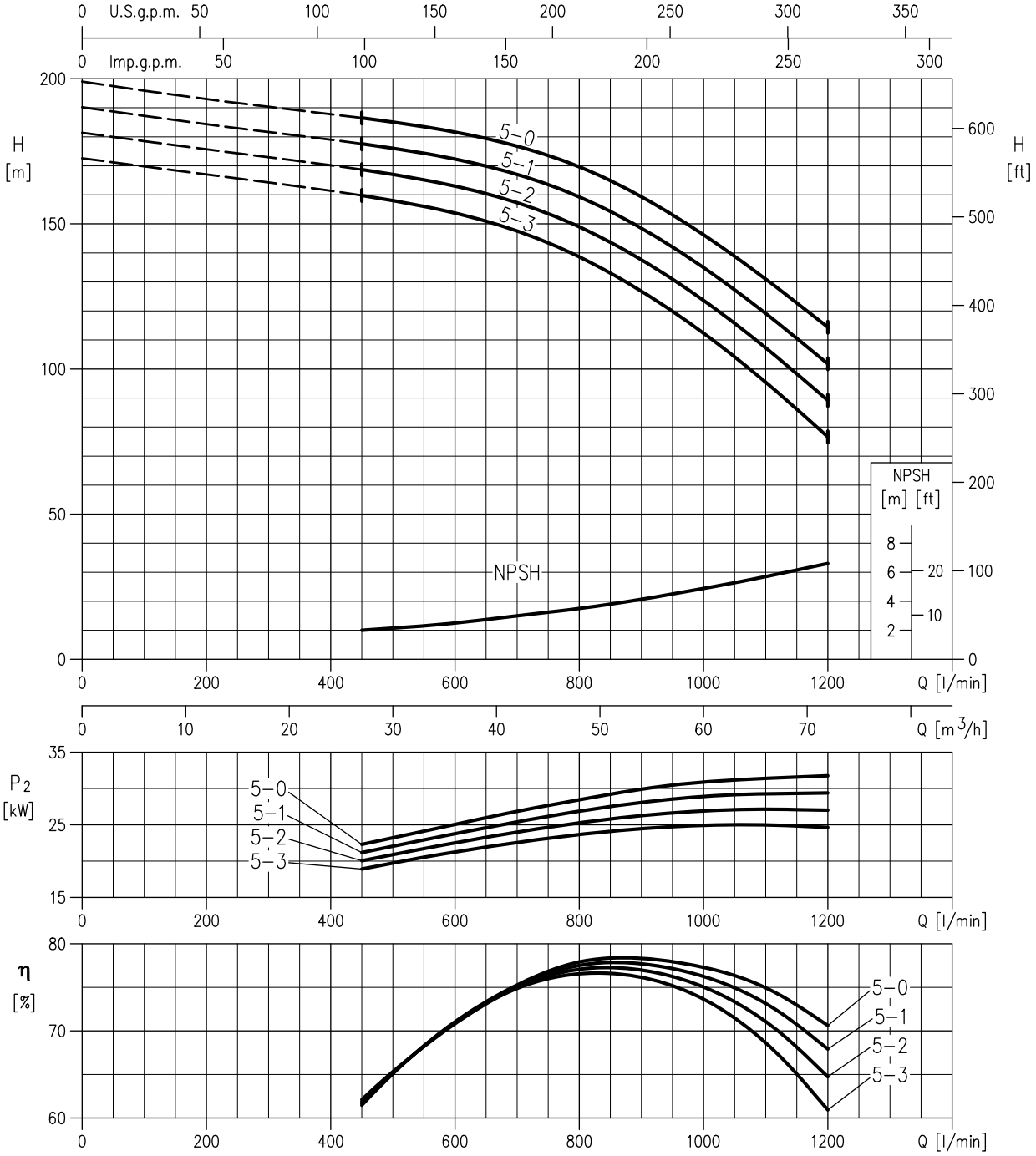

Rotation speed ≈ 3540 min-1
Test standard: ISO 9906 – Annex A

PERFORMANCE CURVE

60Hz

Rev. G

EVM(.) 45 6-3 F6/37 (37kW) - no.3 impellers diameter= 143 mm / no.3 impellers diameter= 127 mm
EVM(.) 45 6-2 F6/37 (37kW) - no.4 impellers diameter= 143 mm / no.2 impellers diameter= 127 mm
EVM(.) 45 6-1 F6/37 (37kW) - no.5 impellers diameter= 143 mm / no.1 impeller diameter= 127 mm

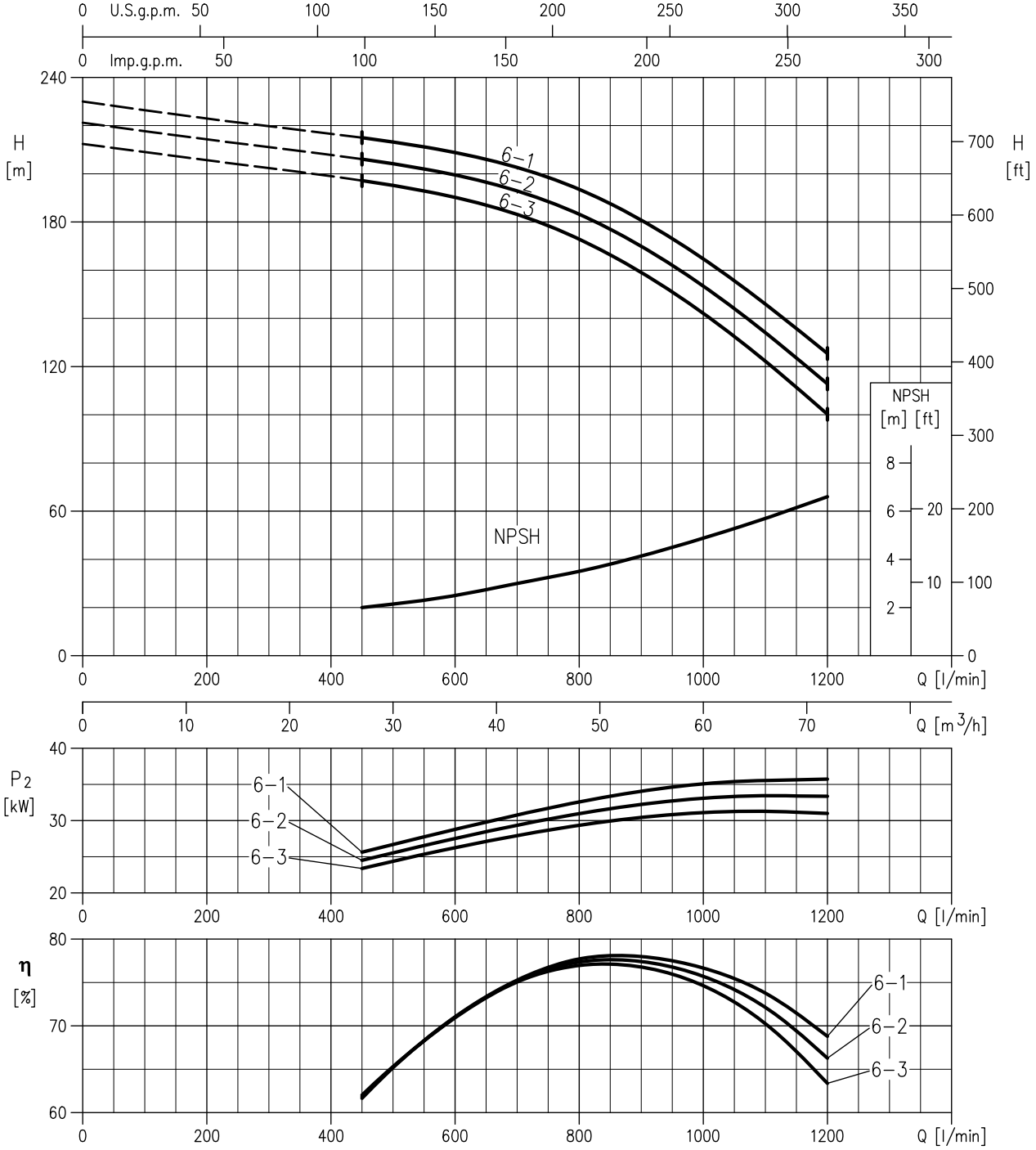

Rotation speed ≈ 3530 min-1
Test standard: ISO 9906 – Annex A

PERFORMANCE CURVE

60Hz

Rev. G

EVM(.) 64 1-1 F6/7.5 (7.5kW) - no.1 impellers diameter = 131 mm
EVM(.) 64 1-0 F6/11 (11kW) - no.1 impeller diameter = 143 mm

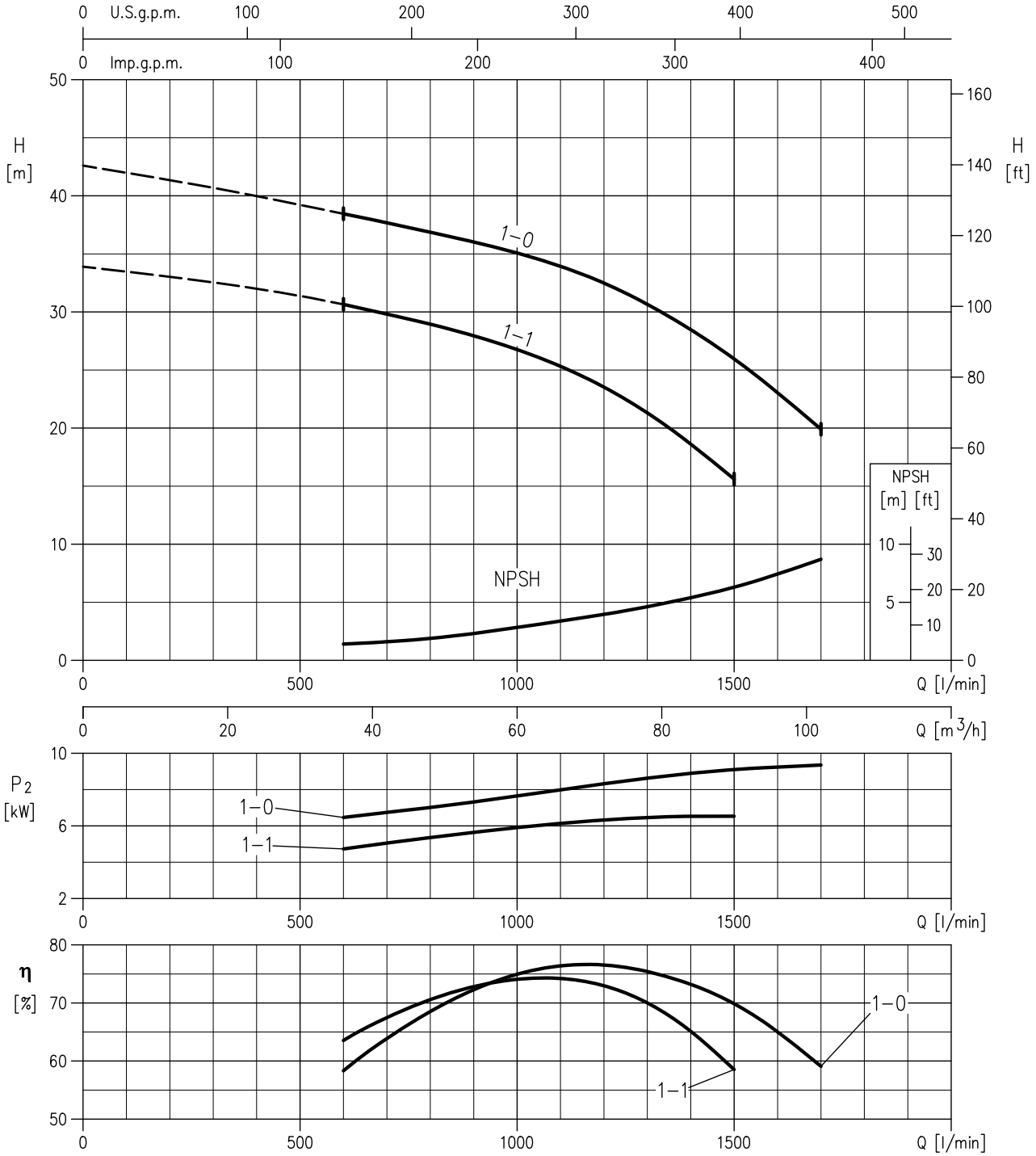

Rotation speed ≈ 3520 min-1
Test standard: ISO 9906 – Annex A

PERFORMANCE CURVE

60Hz

Rev. G

EVM(.) 64 2-2 F6/15 (15kW) - no.2 impellers diameter = 131 mm
EVM(.) 64 2-1 F6/18.5 (18.5kW) - no.1 impeller diameter = 143 mm / no.1 impeller diameter = 131mm
EVM(.) 64 2-0 F6/22 (22kW) - no.2 impellers diameter = 143 mm

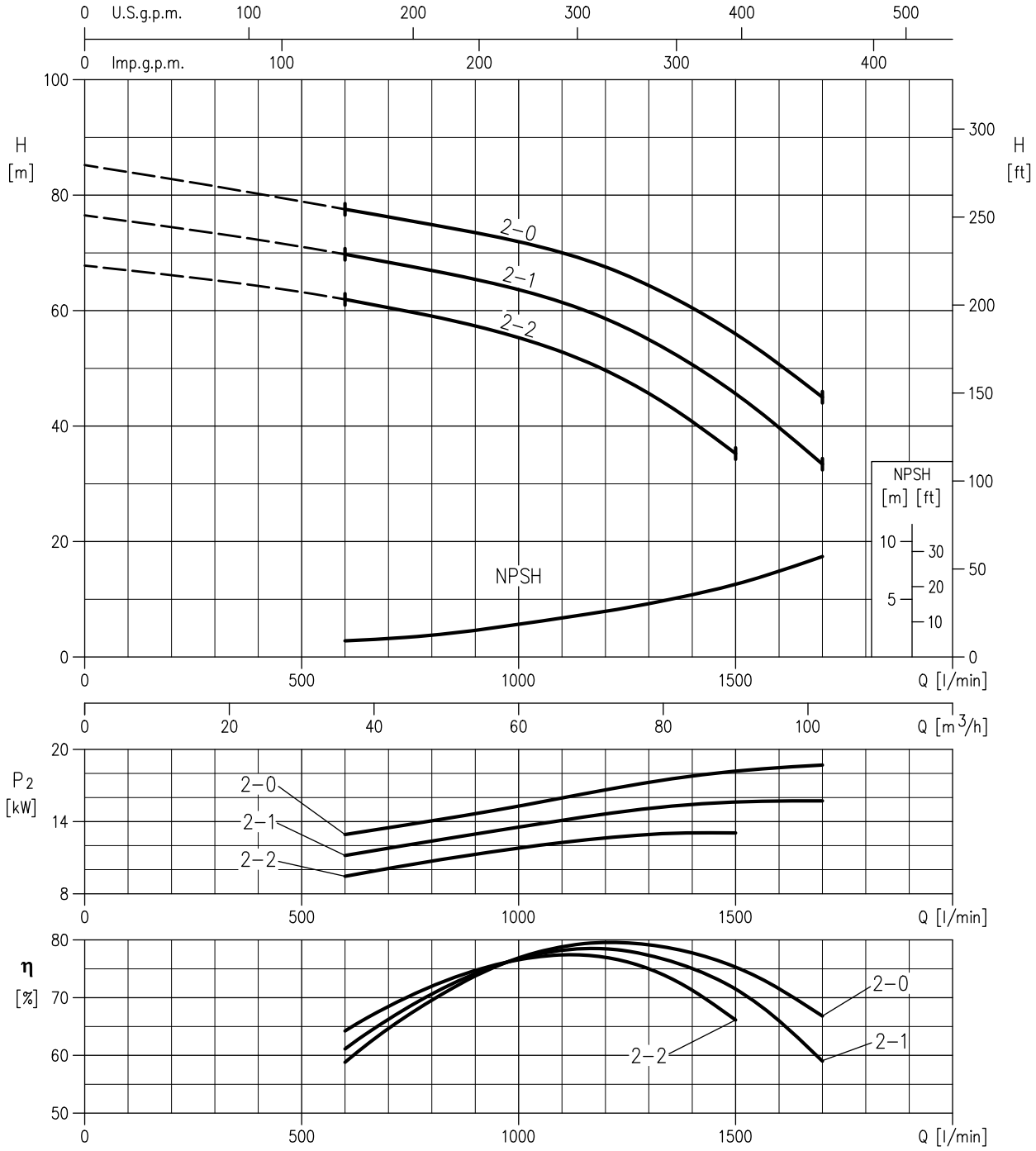

Rotation speed ≈ 3530 min-1
Test standard: ISO 9906 – Annex A

PERFORMANCE CURVE

60Hz

Rev. G

EVM(.) 64 3-3 F6/22 (22kW) - no.3 impellers diameter = 131mm
EVM(.) 64 3-2 F6/30 (30kW) - no.1 impeller diameter = 143 mm / no.2 impellers diameter = 131mm
EVM(.) 64 3-1 F6/30 (30kW) - no.2 impellers diameter = 143 mm / no.1 impeller diameter = 131mm
EVM(.) 64 3-0 F6/30 (30kW) - no.3 impellers diameter = 143 mm

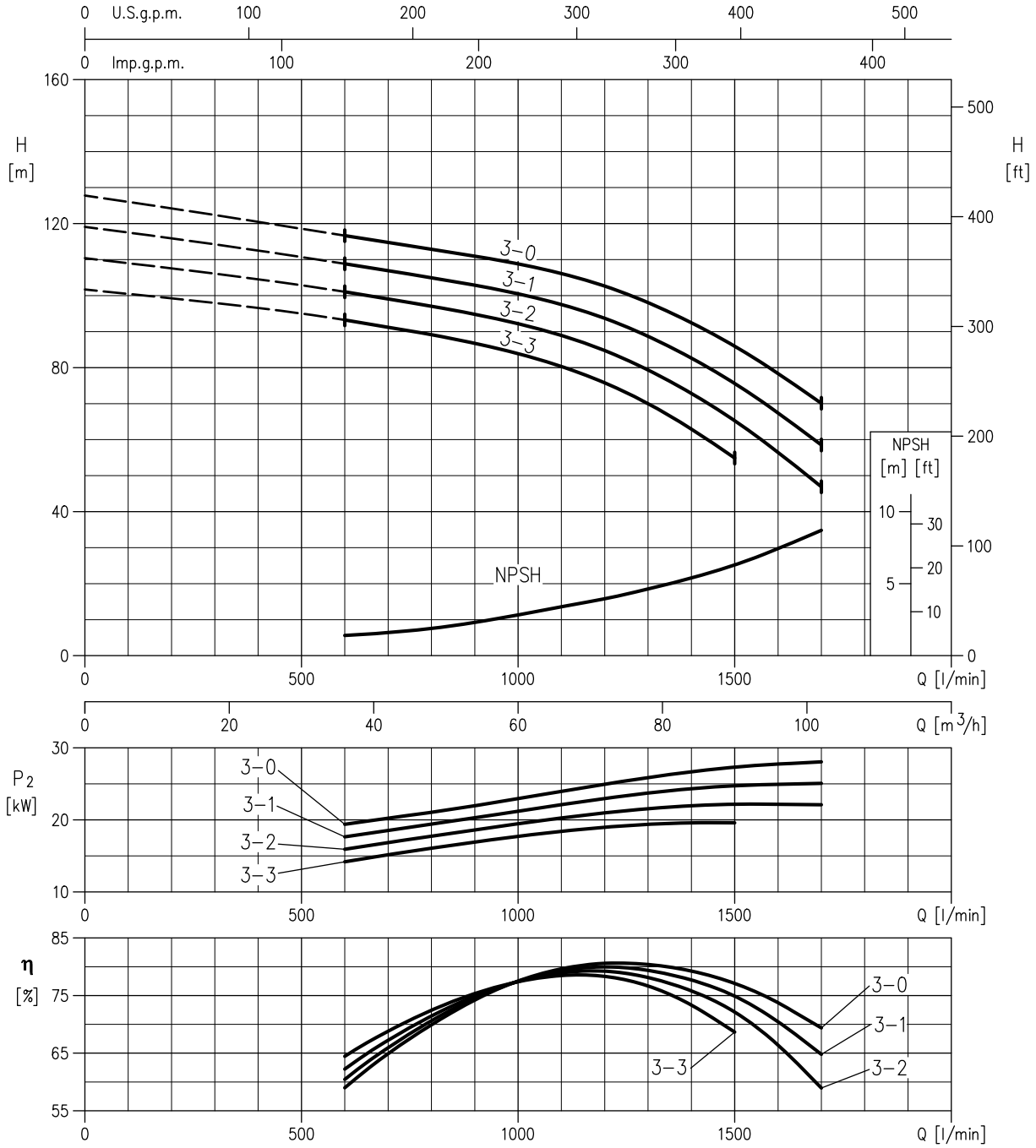

Rotation speed ≈ 3540 min-1
Test standard: ISO 9906 – Annex A

PERFORMANCE CURVE

60Hz

Rev. G

EVM(.) 64 4-3 F6/30 (30kW) - no.1 impellers diameter= 143 mm / no.3 impellers diameter = 131mm
EVM(.) 64 4-2 F6/37 (37kW) - no.2 impellers diameter= 143 mm / no.2 impellers diameter = 131mm
EVM(.) 64 4-1 F6/37 (37kW) - no.3 impellers diameter= 143 mm / no.1 impeller diameter = 131mm

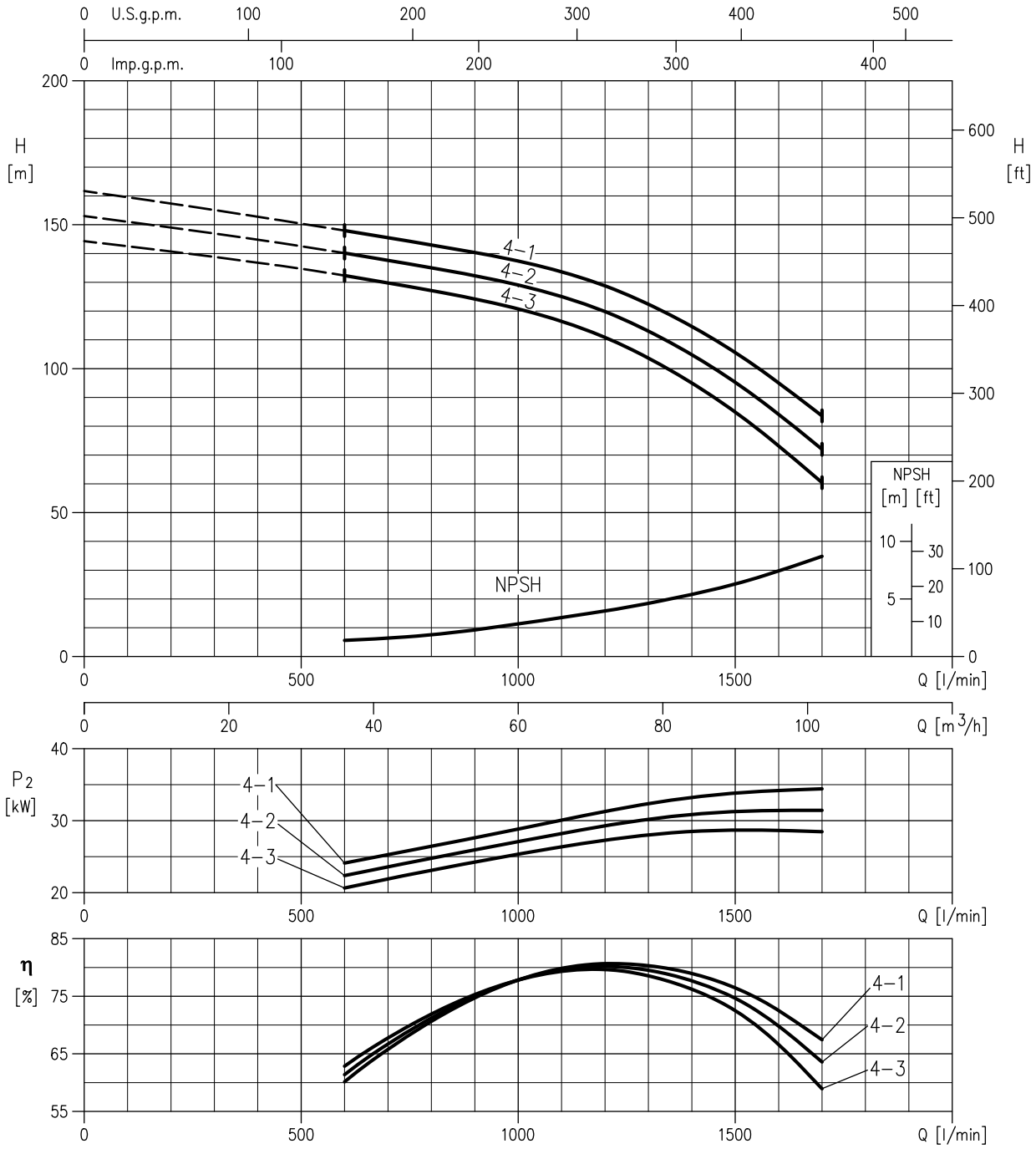

Rotation speed ≈ 3540 min-1
Test standard: ISO 9906 – Annex A

SECTIONAL VIEW
EVM(.) 3
Pump without ball bearing

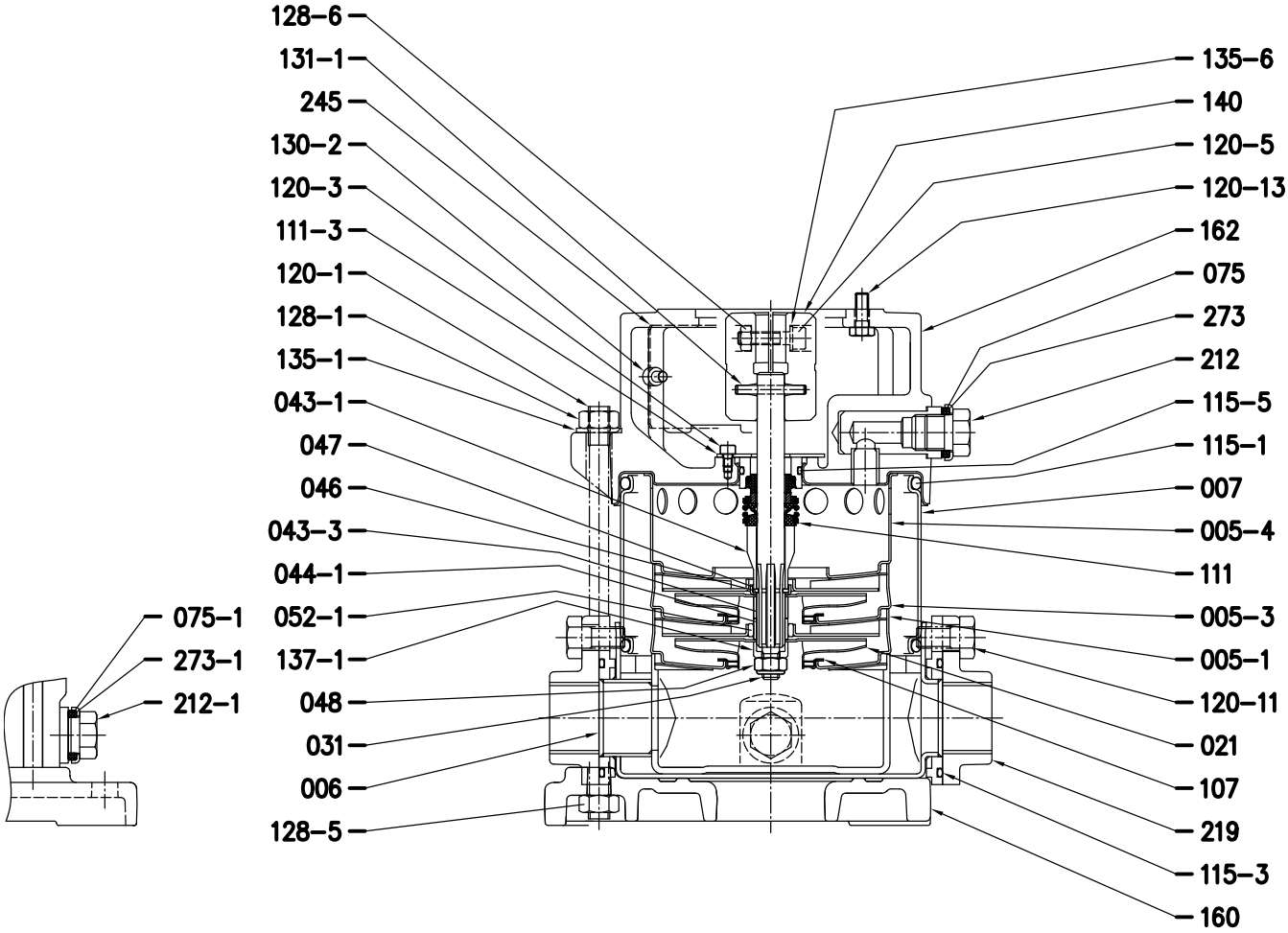

See dimensions page 401

CONSTRUCTION

60Hz

Rev. G

EVM(.) 3
Pump with single ball bearing

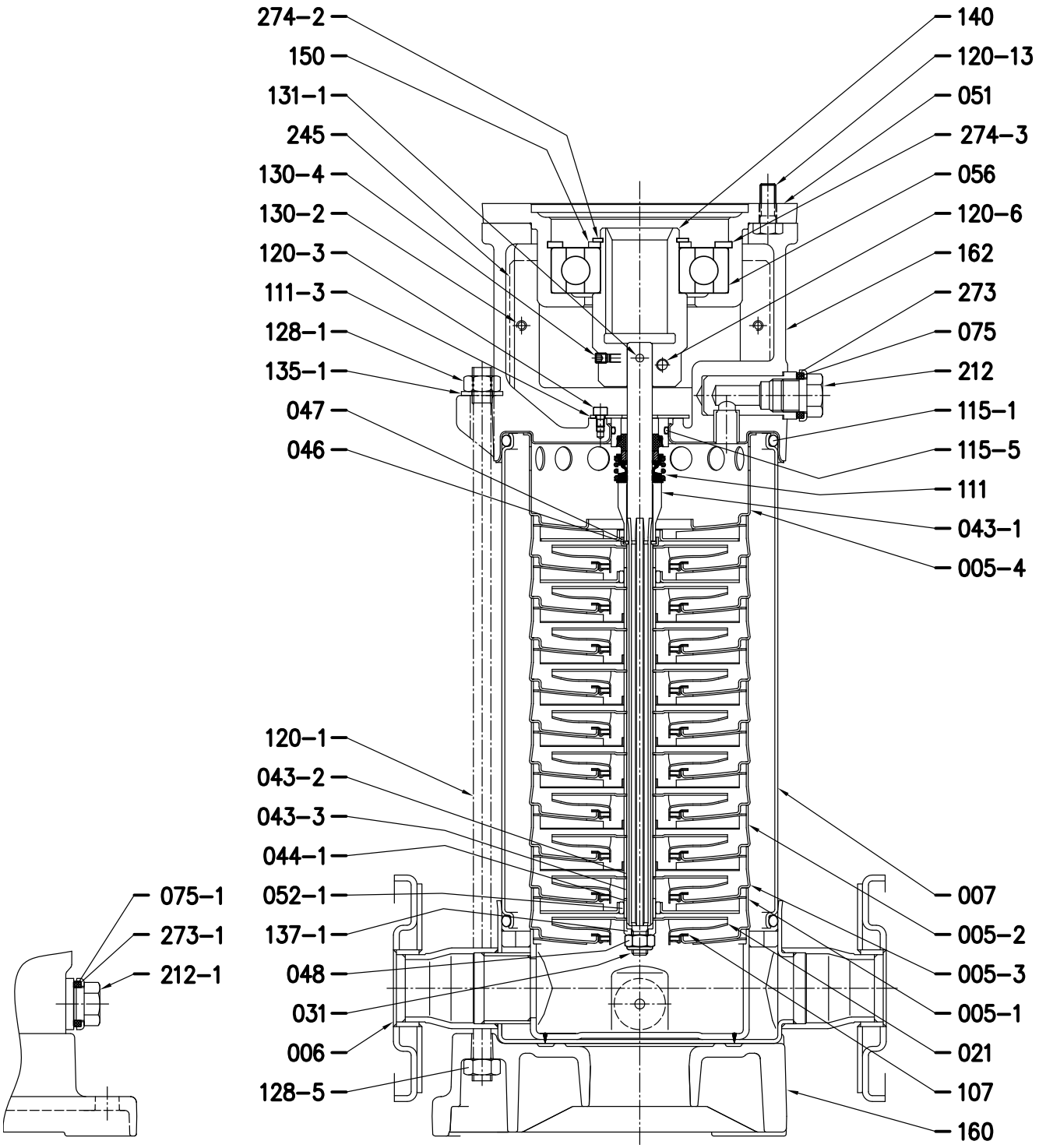

See dimensions page 401

CONSTRUCTION

60Hz

Rev. G

EVMG 3
Pump without ball bearing

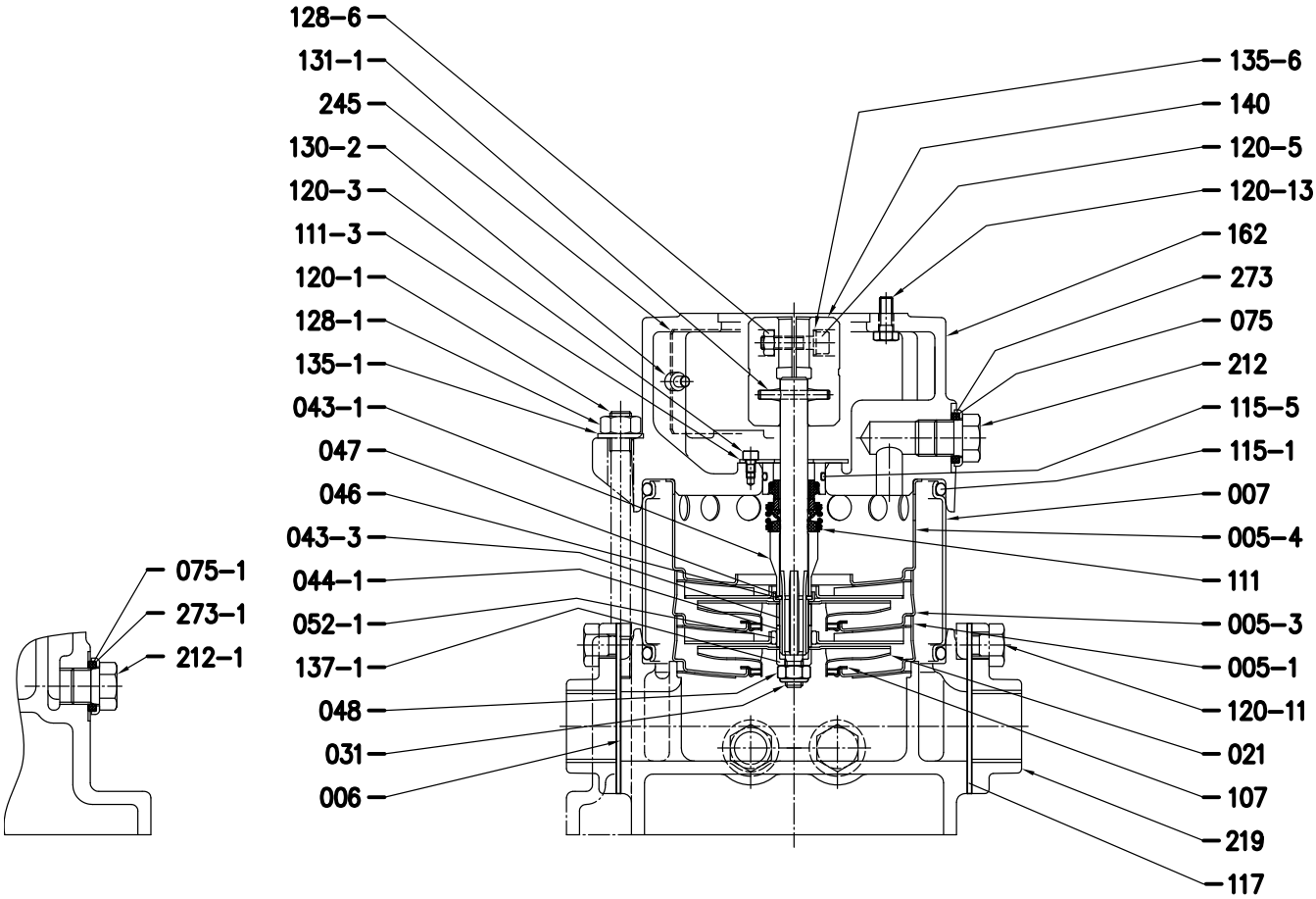

See dimensions page 401.

CONSTRUCTION

60Hz

Rev. G

EVMG 3
Pump with single ball bearing

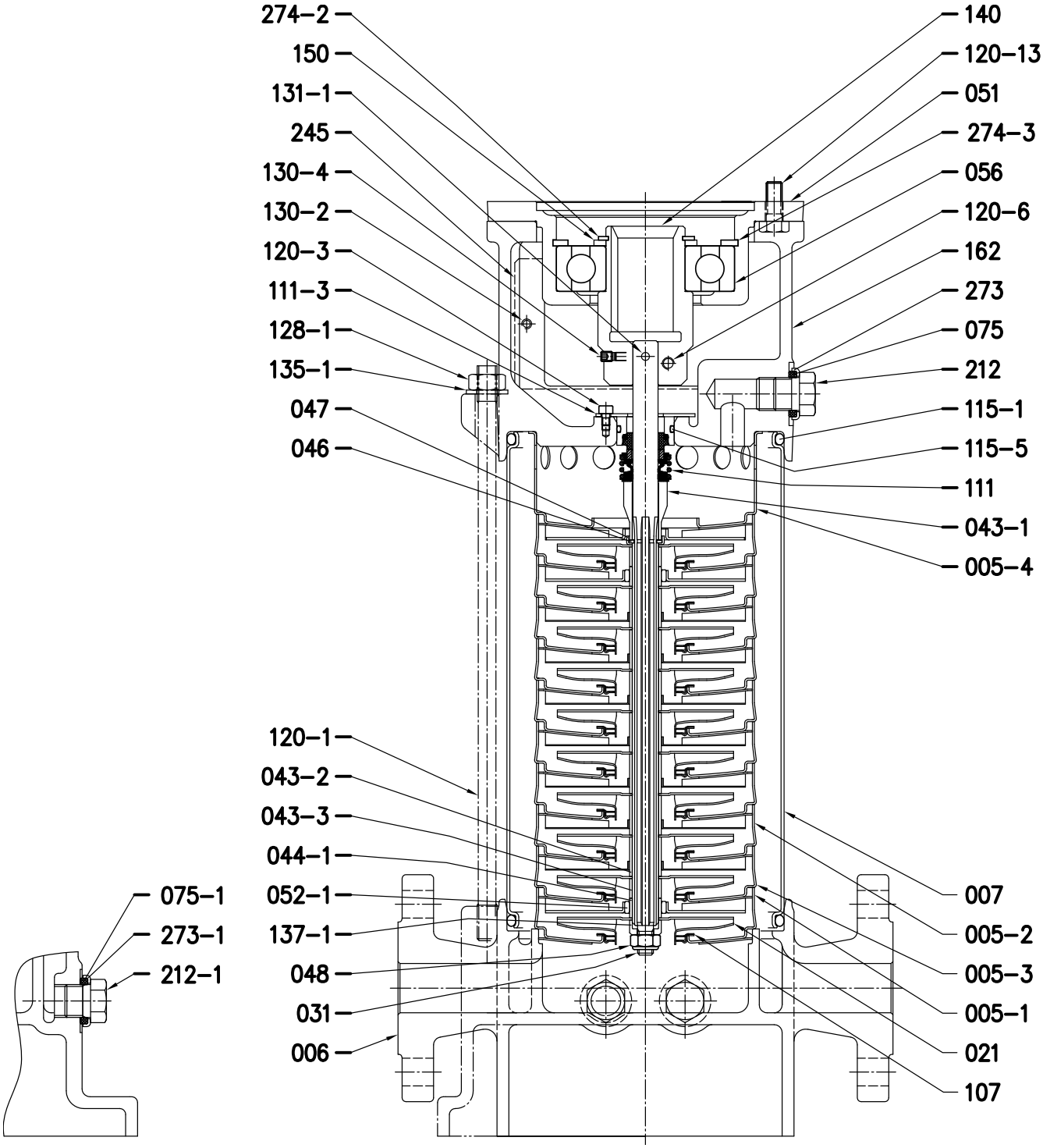

See dimensions page 401.

CONSTRUCTION

60Hz

Rev. G

EVM(.) 5
Pump without ball bearing

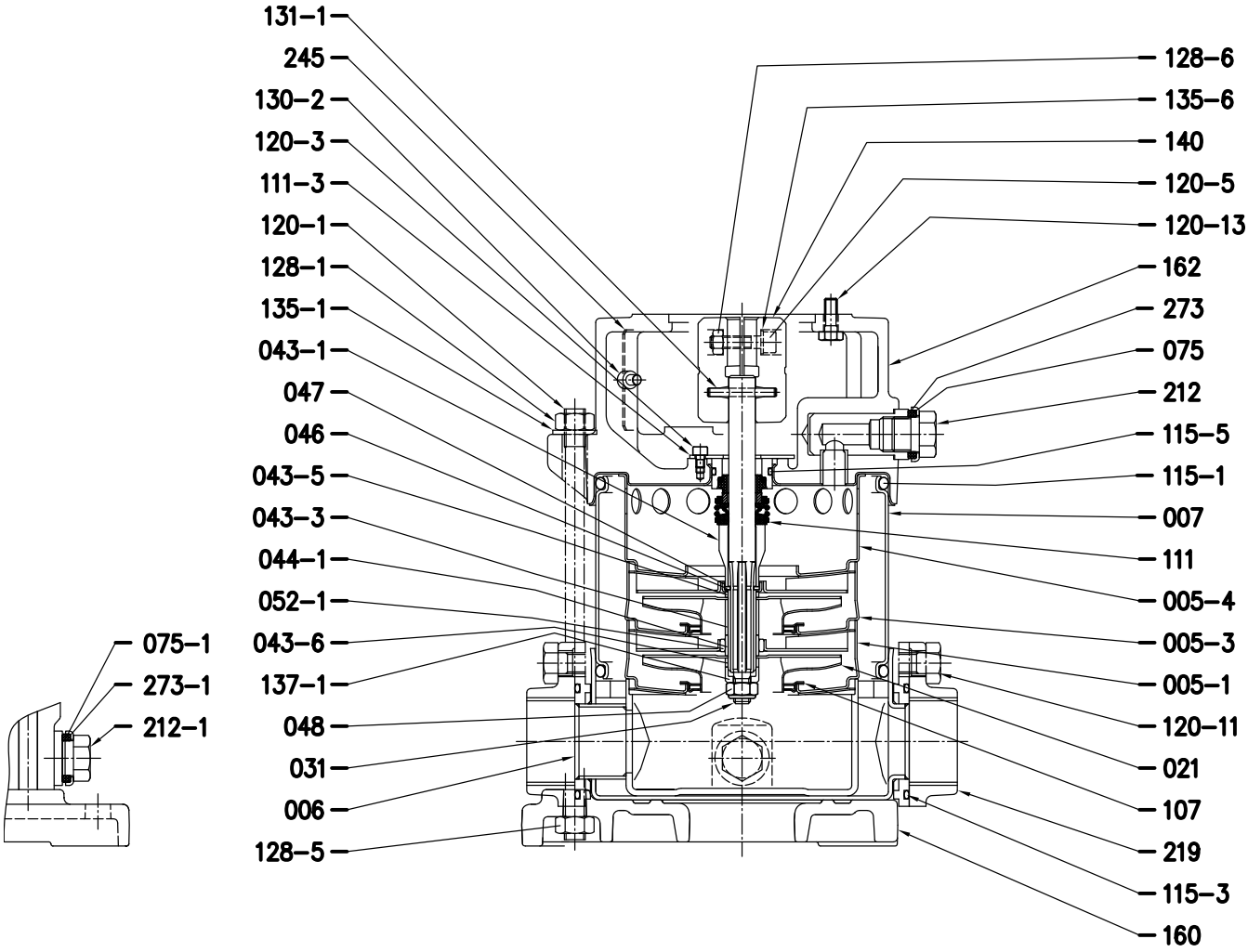

See dimensions page 401

CONSTRUCTION

60Hz

Rev. G

EVM(.) 5
Pump with single ball bearing

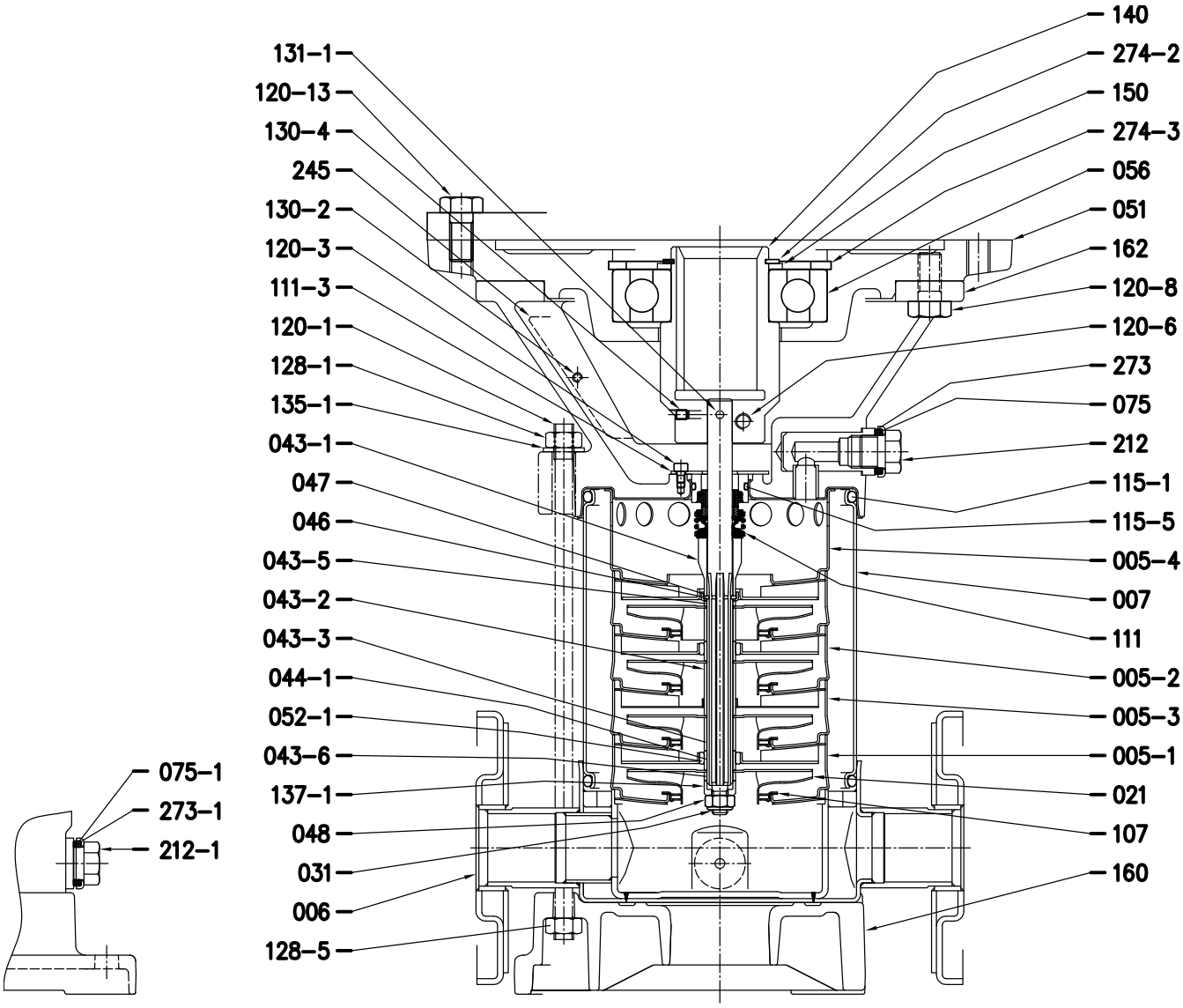

See dimensions page 401

CONSTRUCTION

60Hz

Rev. G

EVMG 5
Pump without ball bearing

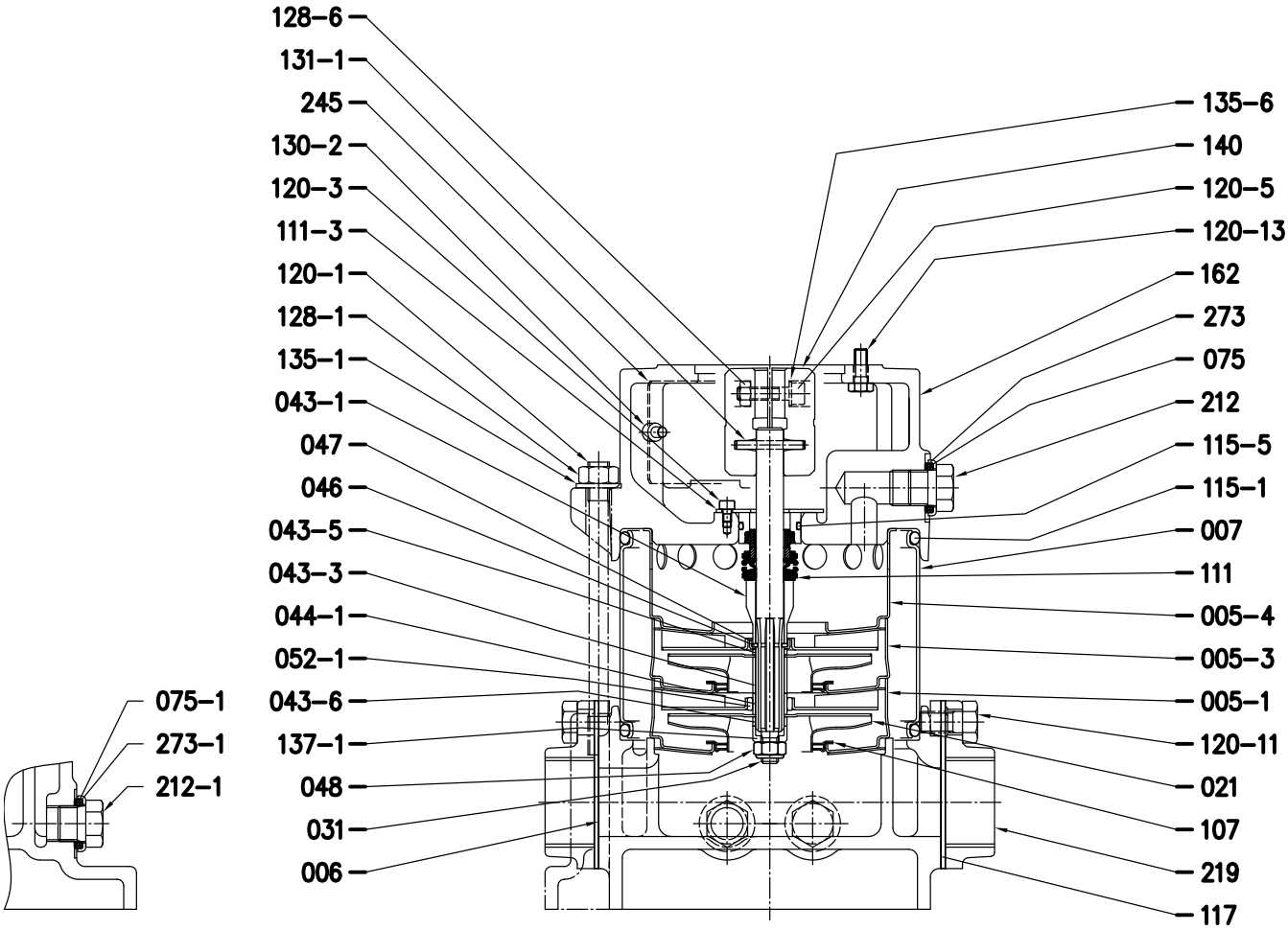

See dimensions page 401

CONSTRUCTION

60Hz

Rev. G

EVMG 5
Pump with single ball bearing

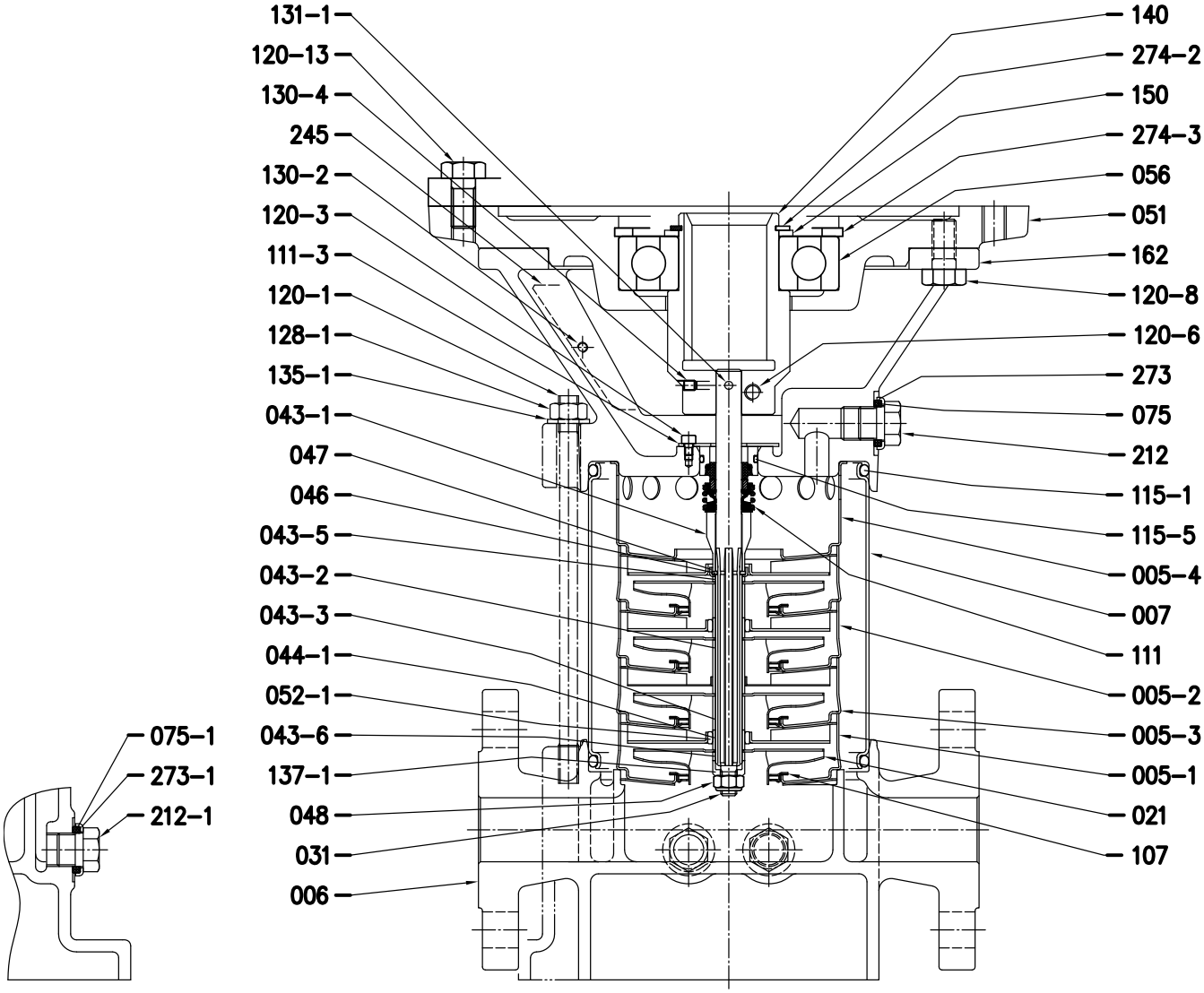

See dimensions page 401

CONSTRUCTION

60Hz

Rev. G

EVM(.) 10
Pump without ball bearing

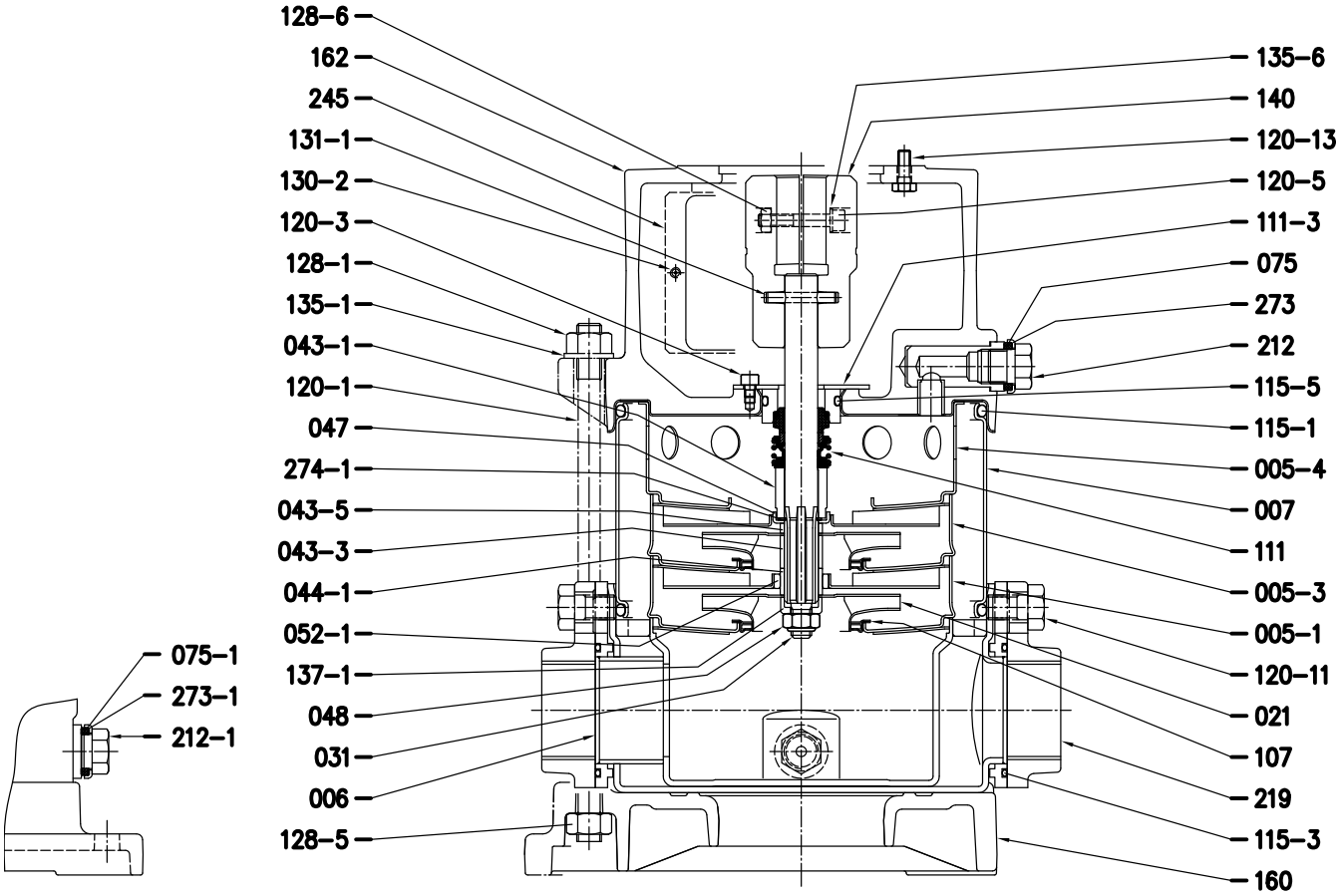

See dimensions page 402

CONSTRUCTION

60Hz

Rev. G

EVM(.) 10
Pump with single ball bearing

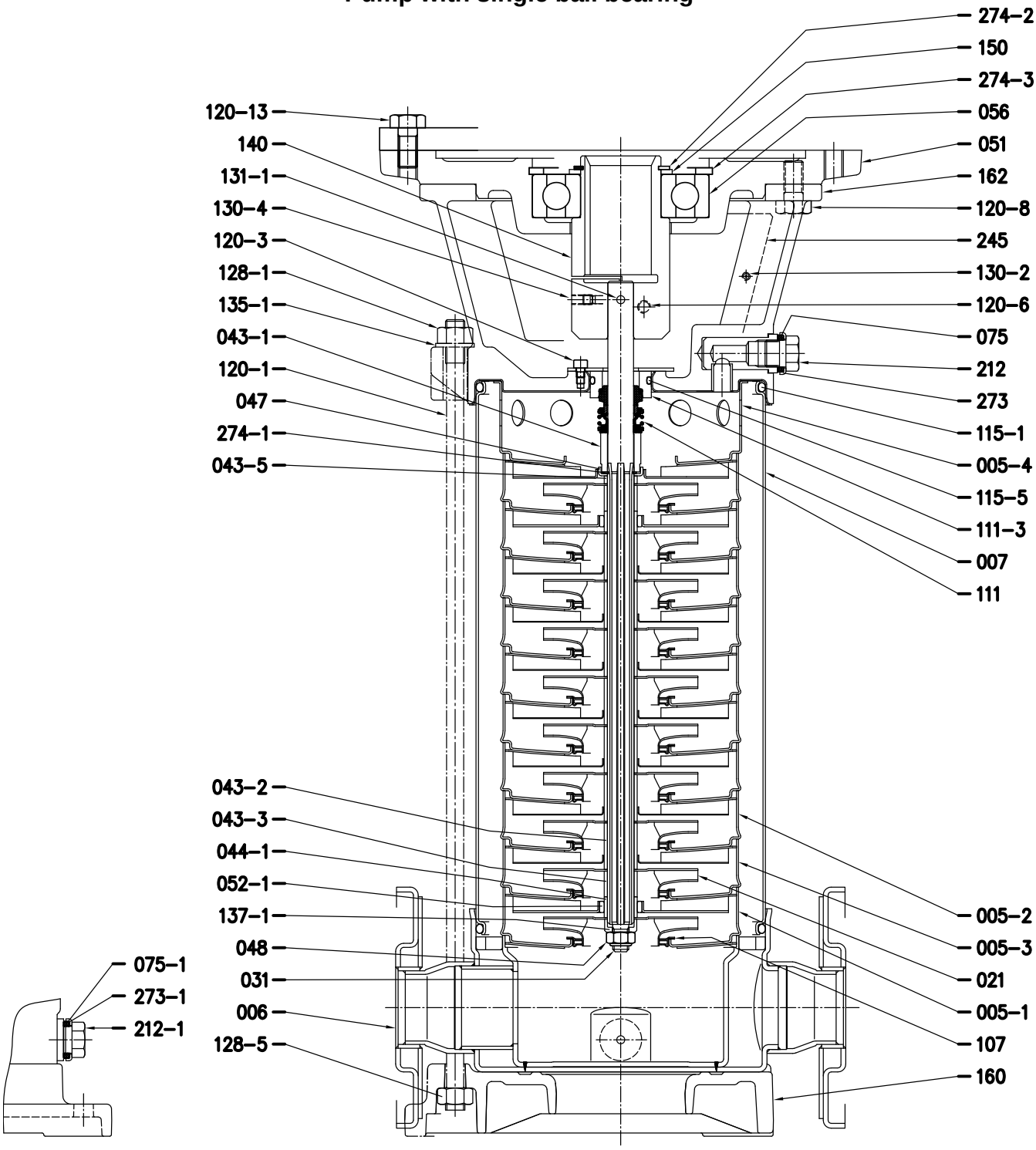

See dimensions page 402

CONSTRUCTION

60Hz

Rev. G

EVM(.) 10
Pump with single ball bearing

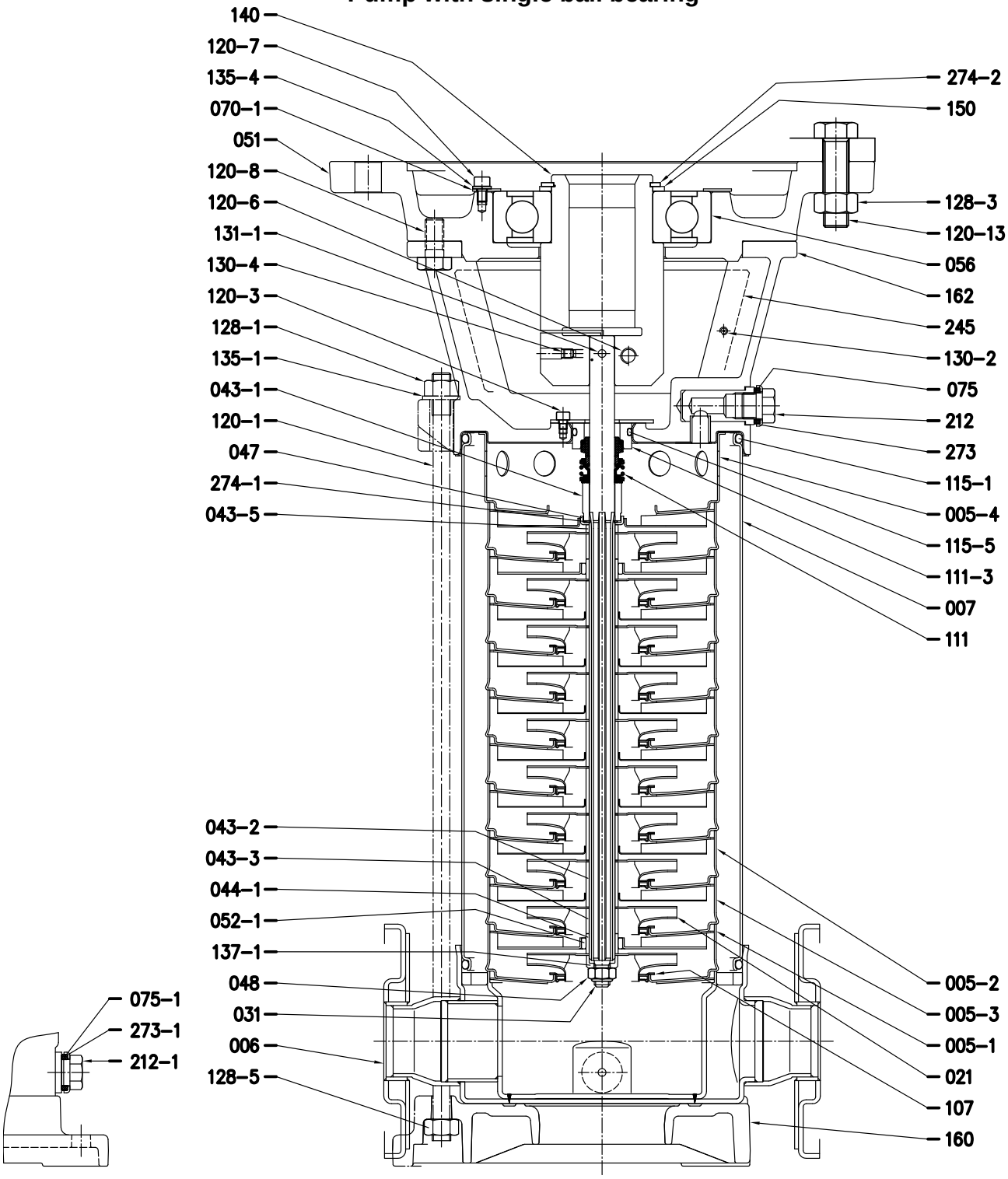

See dimensions page 402

CONSTRUCTION

60Hz

Rev. G

EVMG 10
Pump without ball bearing

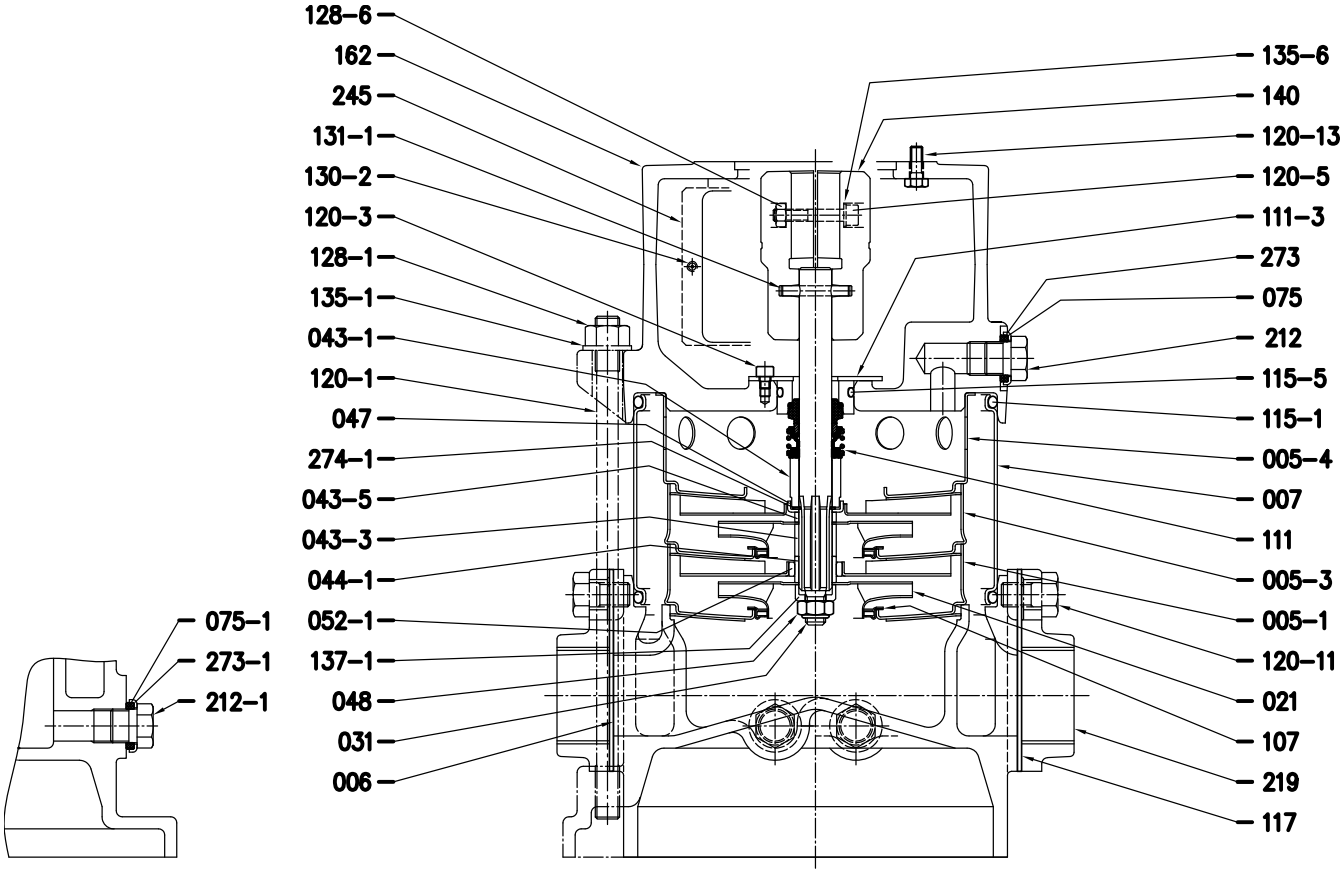

See dimensions page 402

CONSTRUCTION

60Hz

Rev. G

EVMG 10
Pump with single ball bearing

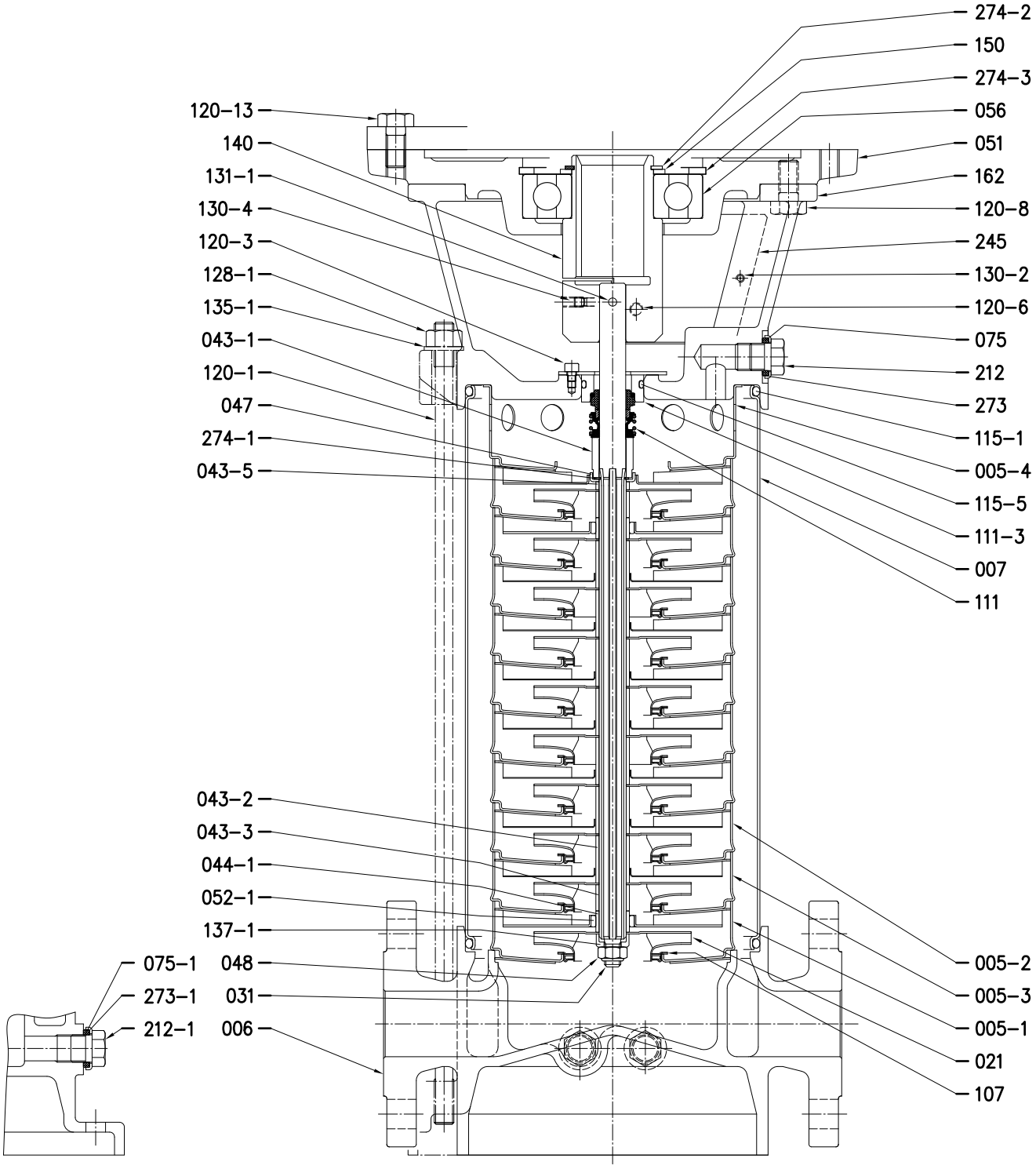

See dimensions page 402

CONSTRUCTION

60Hz

Rev. G

EVMG 10
Pump with single ball bearing

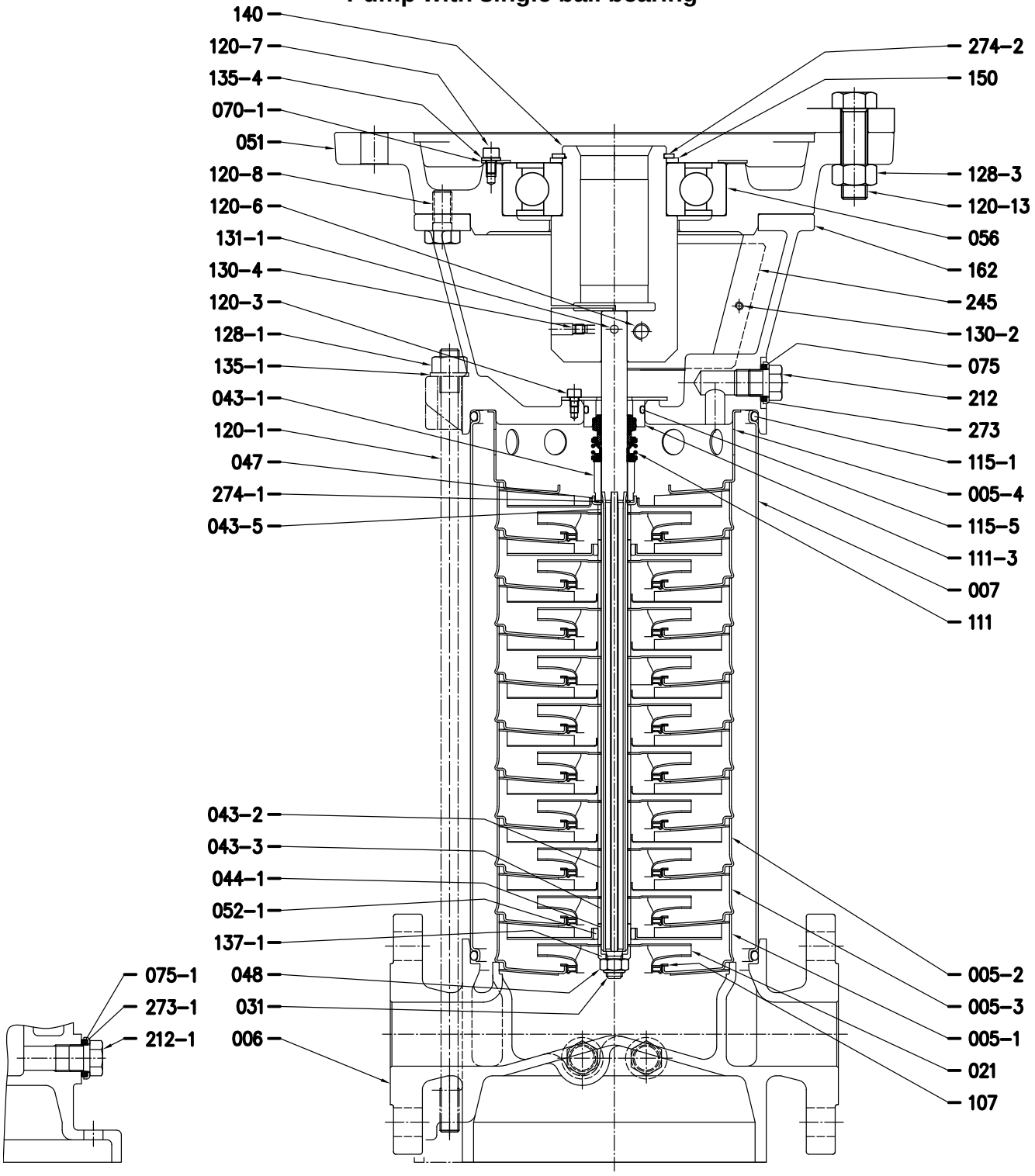

See dimensions page 402

CONSTRUCTION

60Hz

Rev. G

EVM(.) 18
Pump without ball bearing

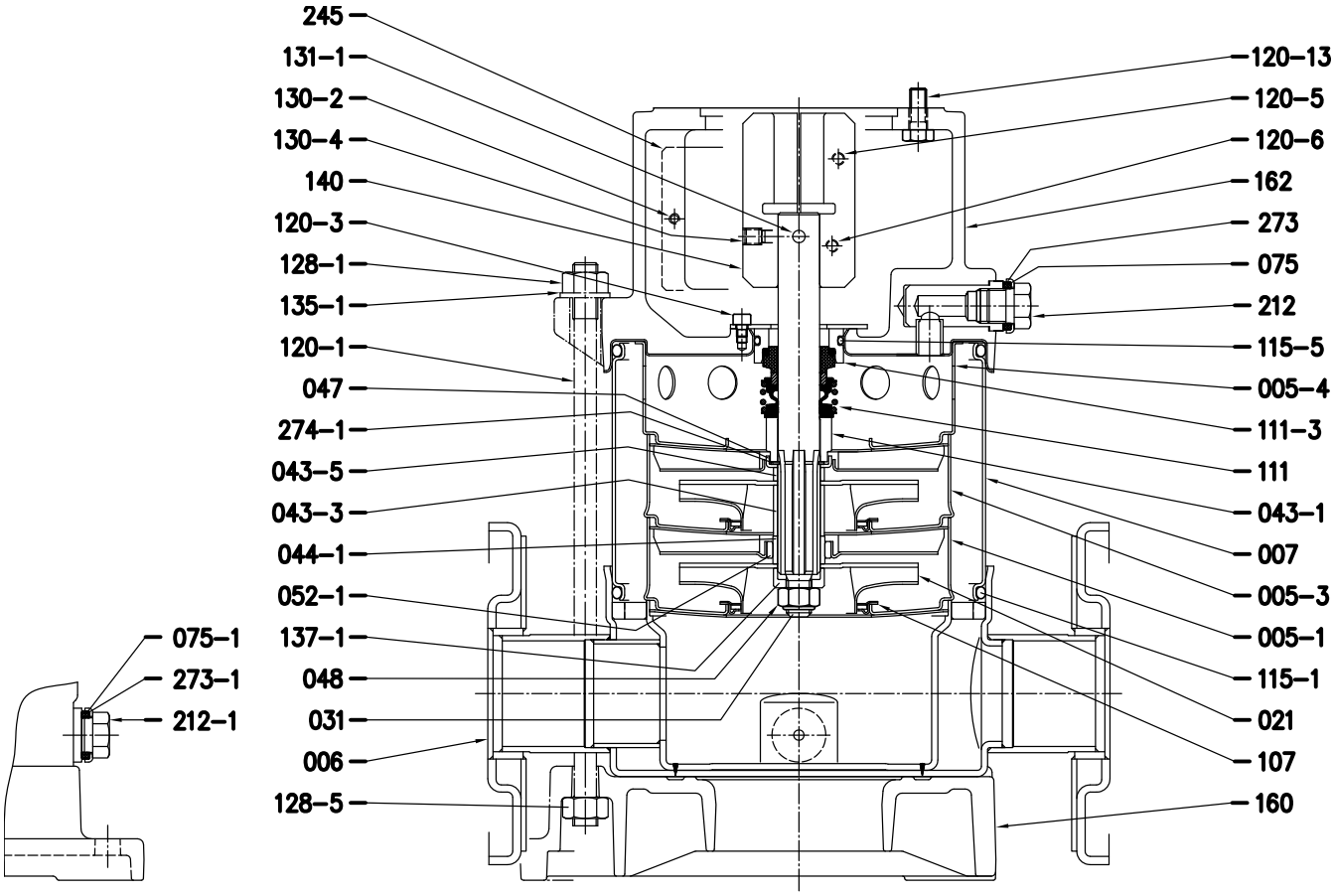

See dimensions page 402

CONSTRUCTION

60Hz

Rev. G

EVM(.) 18
Pump with single ball bearing

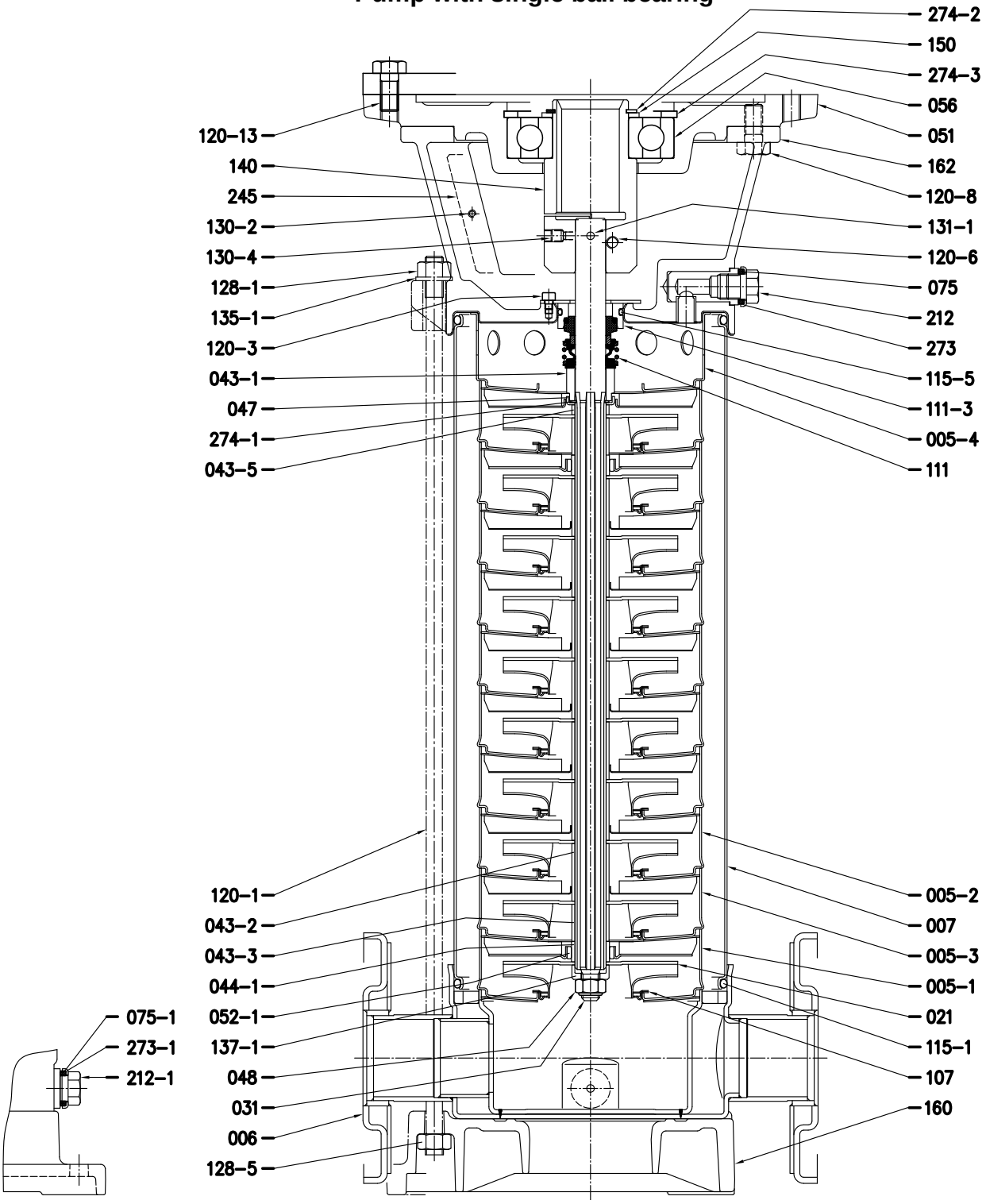

See dimensions page 402

CONSTRUCTION

60Hz

Rev. G

EVM(.) 18
Pump with single ball bearing

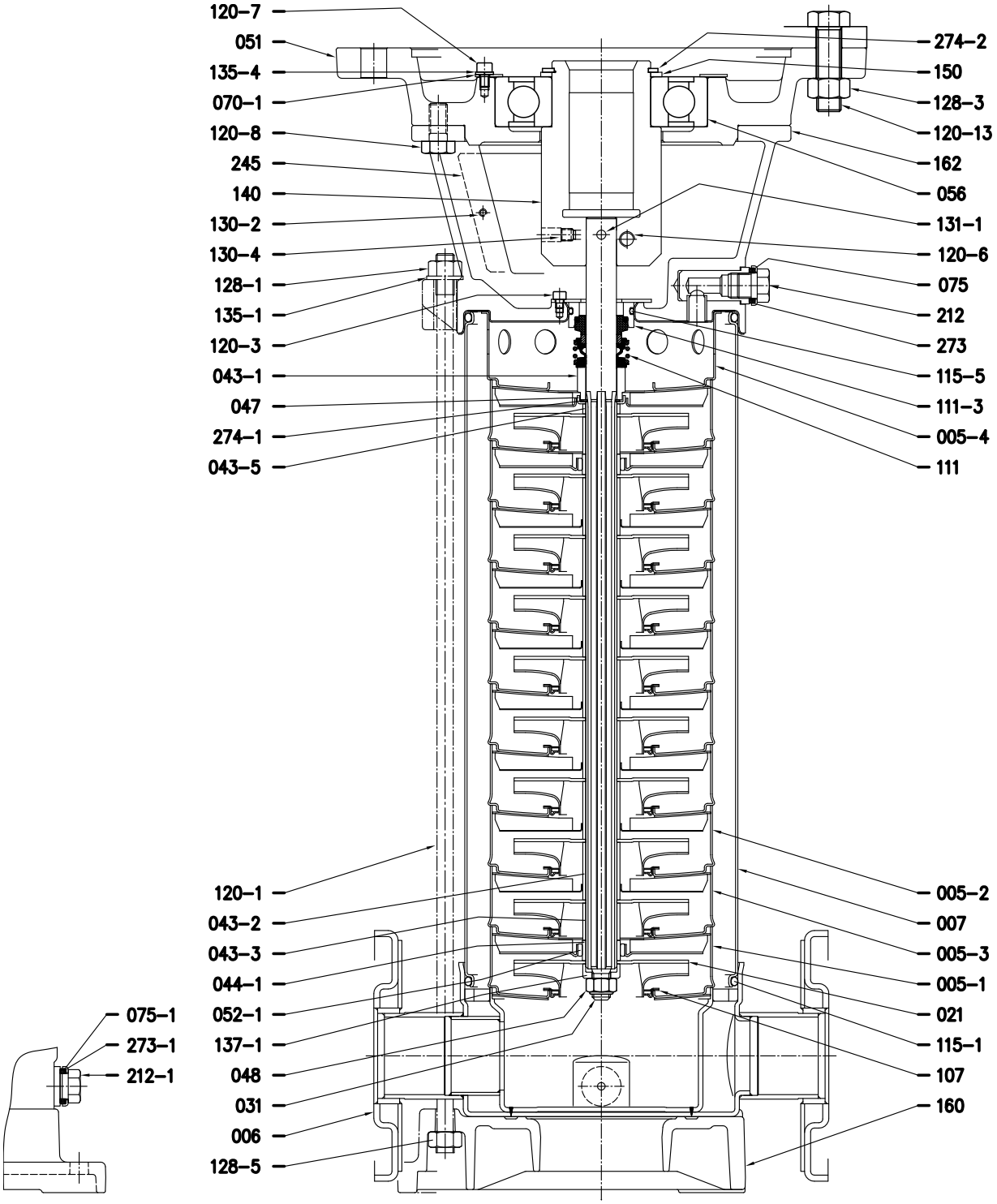

See dimensions page 402

CONSTRUCTION

60Hz

Rev. G

EVMG 18
Pump without ball bearing

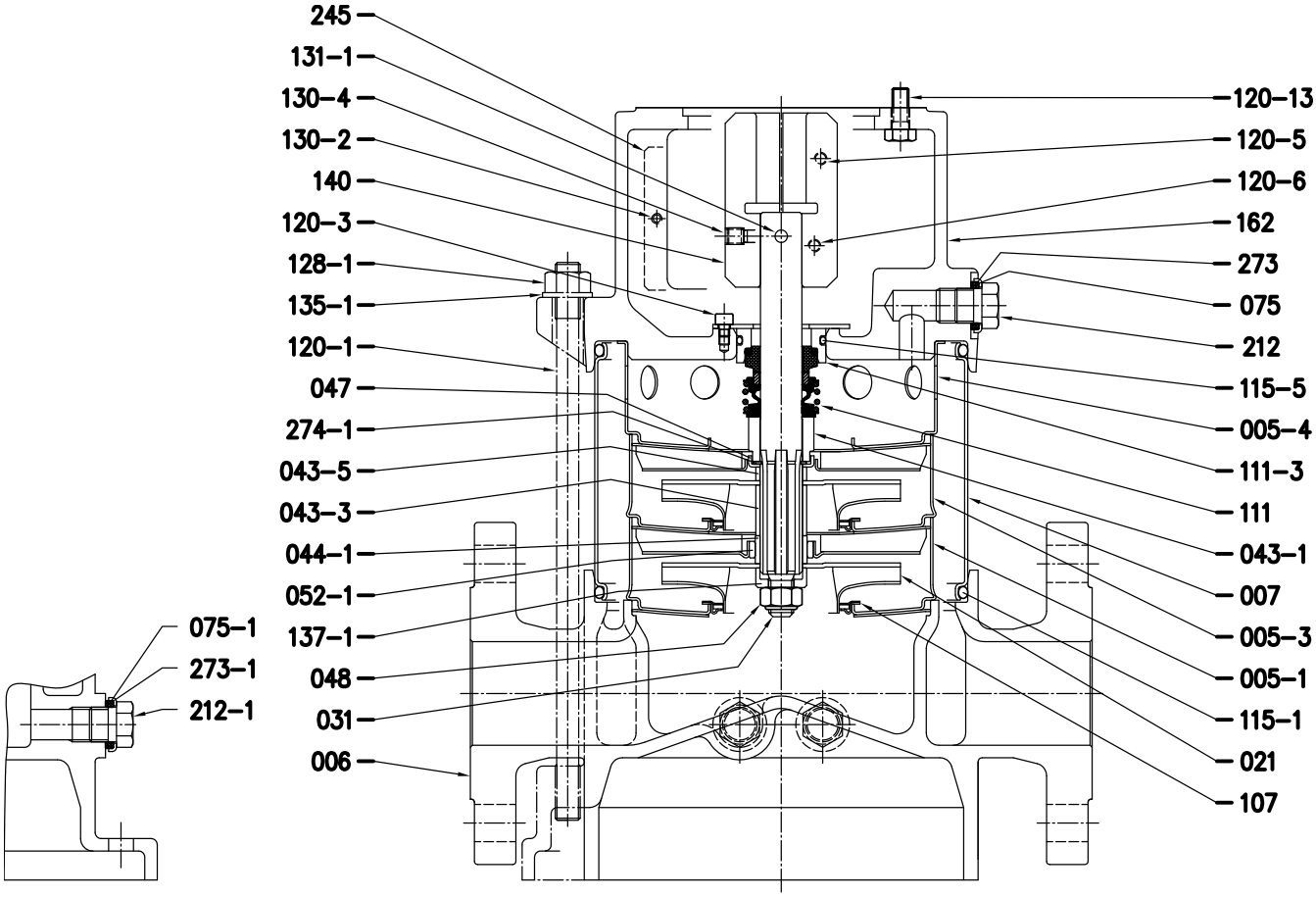

See dimensions page 402

CONSTRUCTION

60Hz

Rev. G

EVMG 18
Pump with single ball bearing

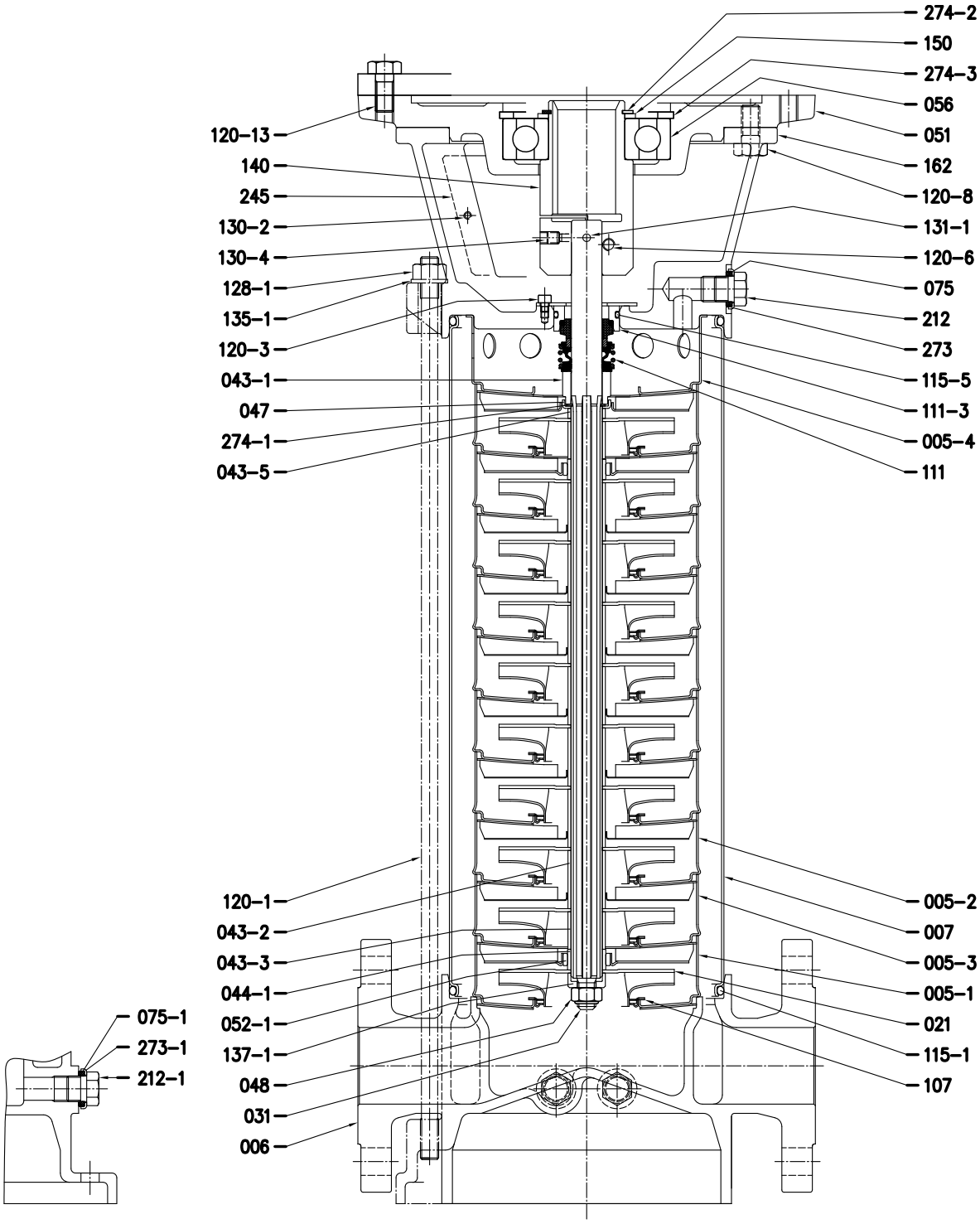

See dimensions page 402

CONSTRUCTION

60Hz

Rev. G

EVMG 18
Pump with single ball bearing

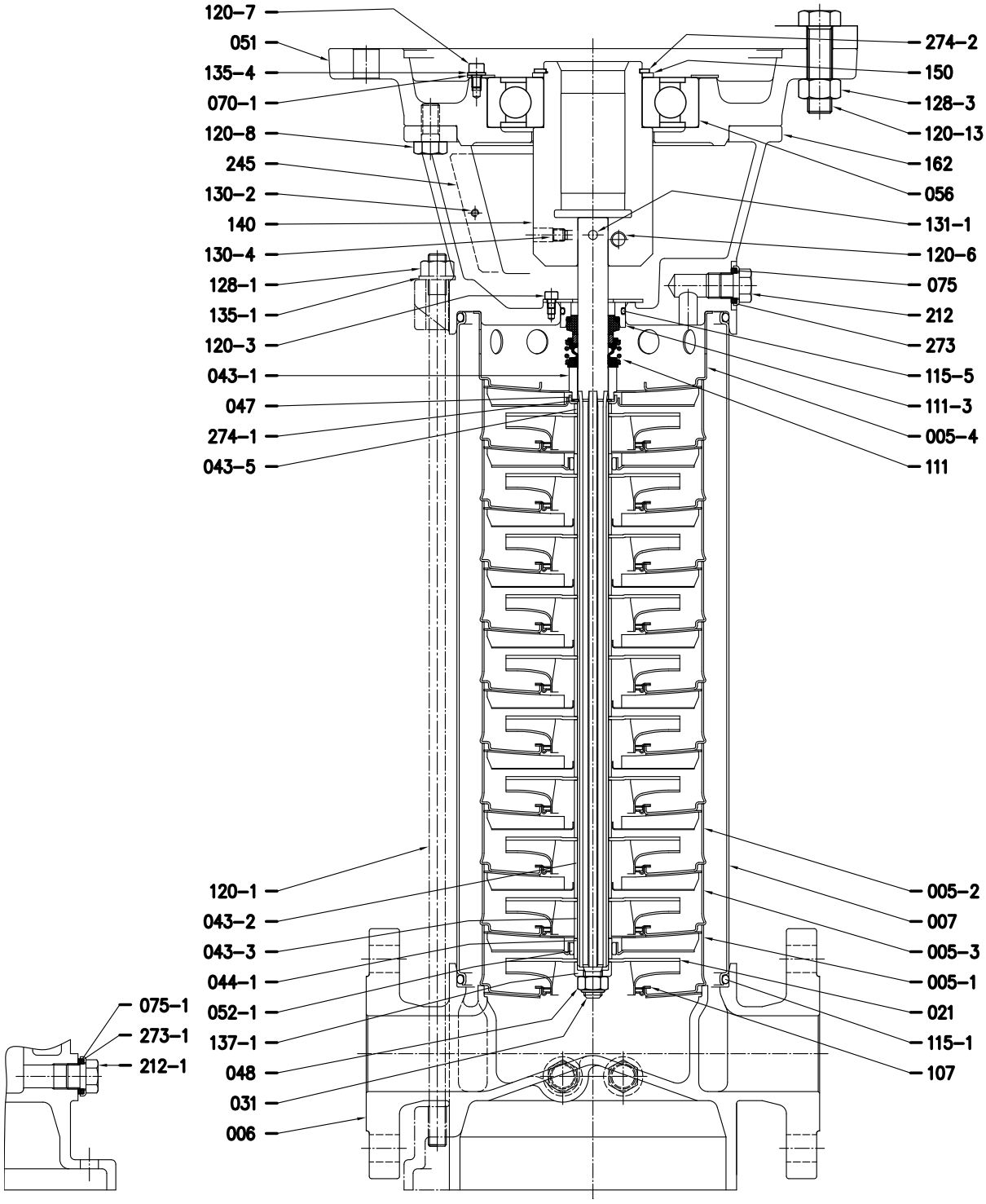

See dimensions page 402

CONSTRUCTION

60Hz

Rev. G

EVM(.) 32
Pump without ball bearing

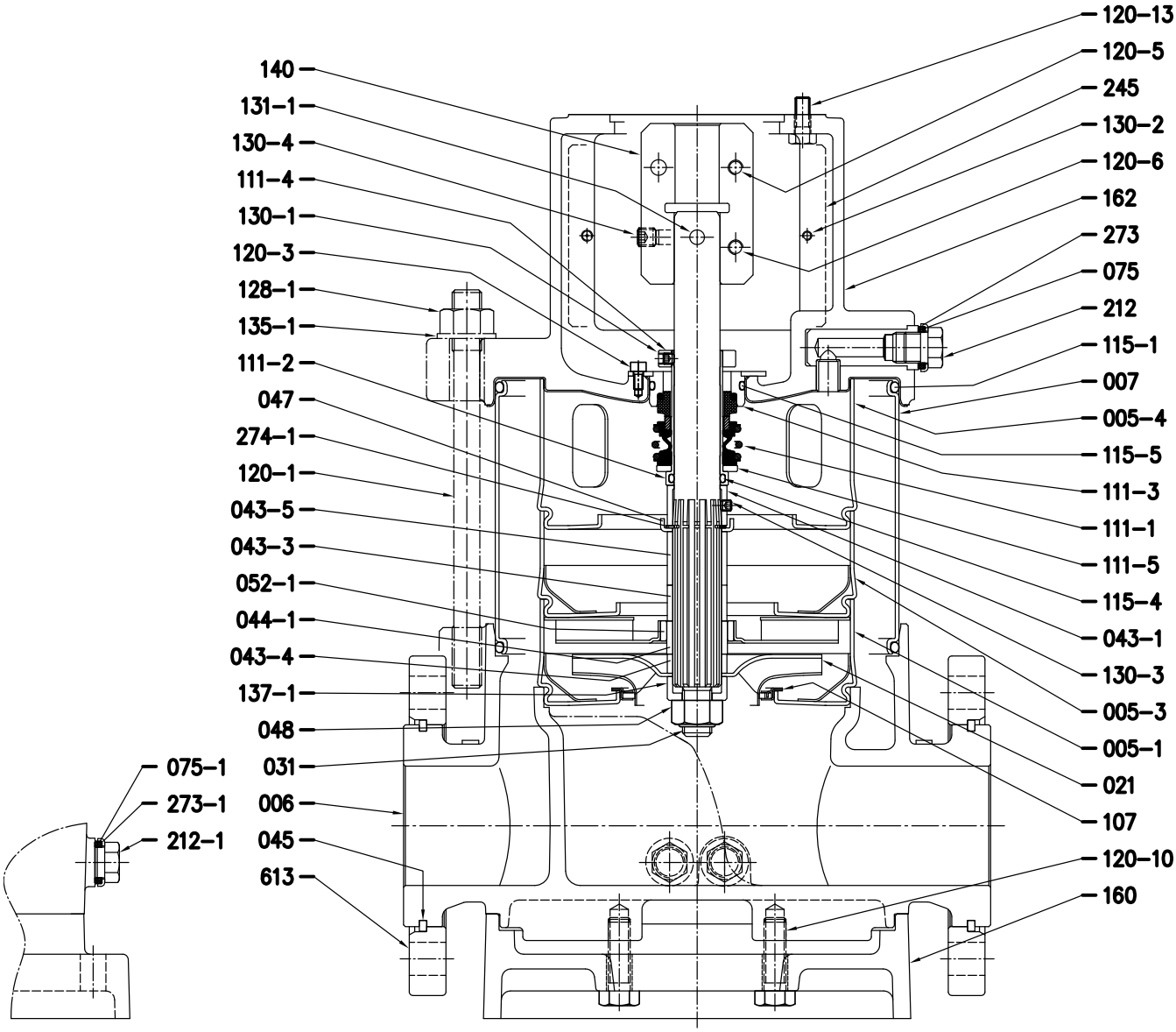

See dimensions page 404

CONSTRUCTION

60Hz

Rev. G

EVM(.) 32
Pump with single ball bearing

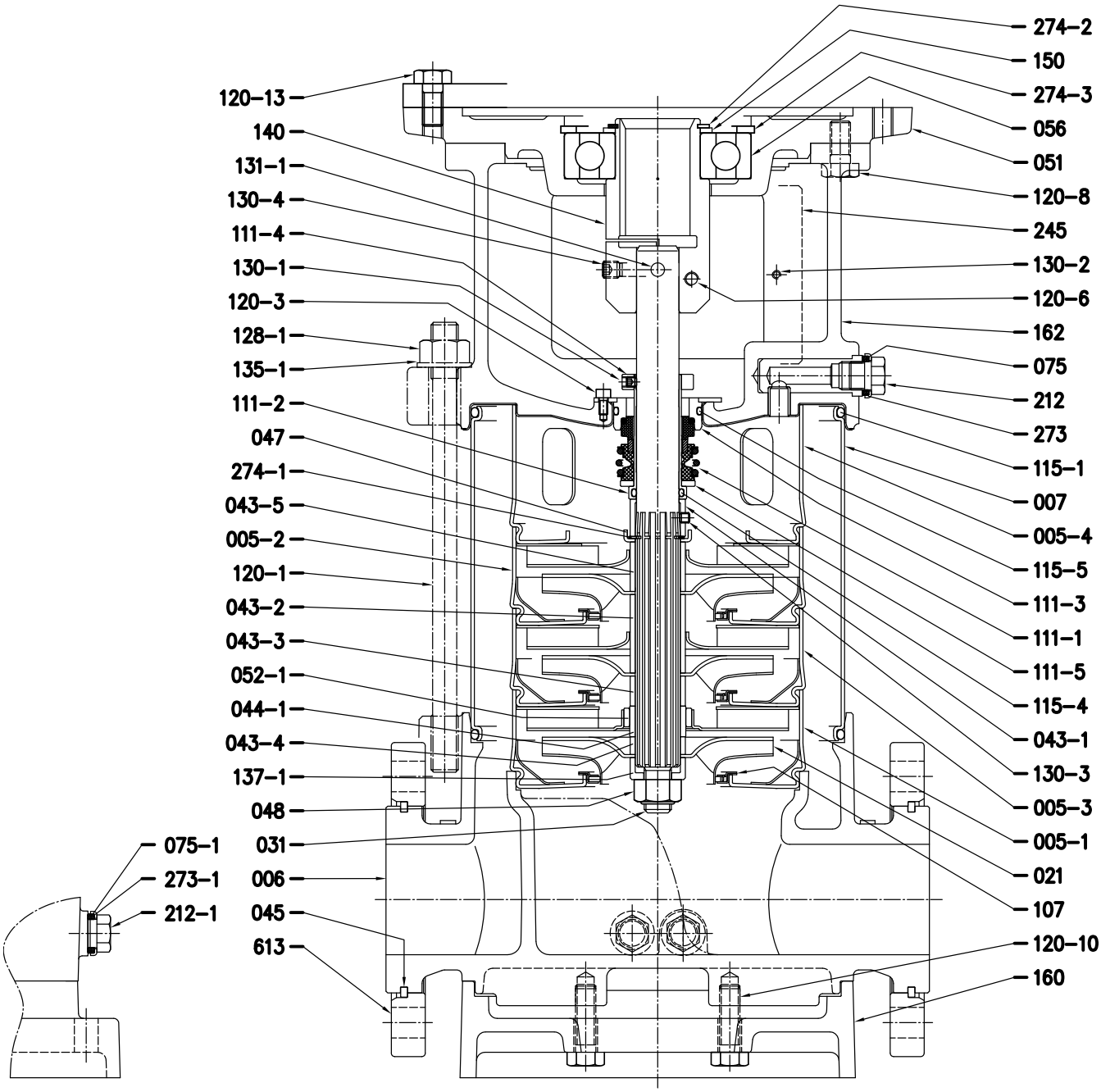

See dimensions pages 404

CONSTRUCTION

60Hz

Rev. G

EVM(.) 32
Pump with single ball bearing

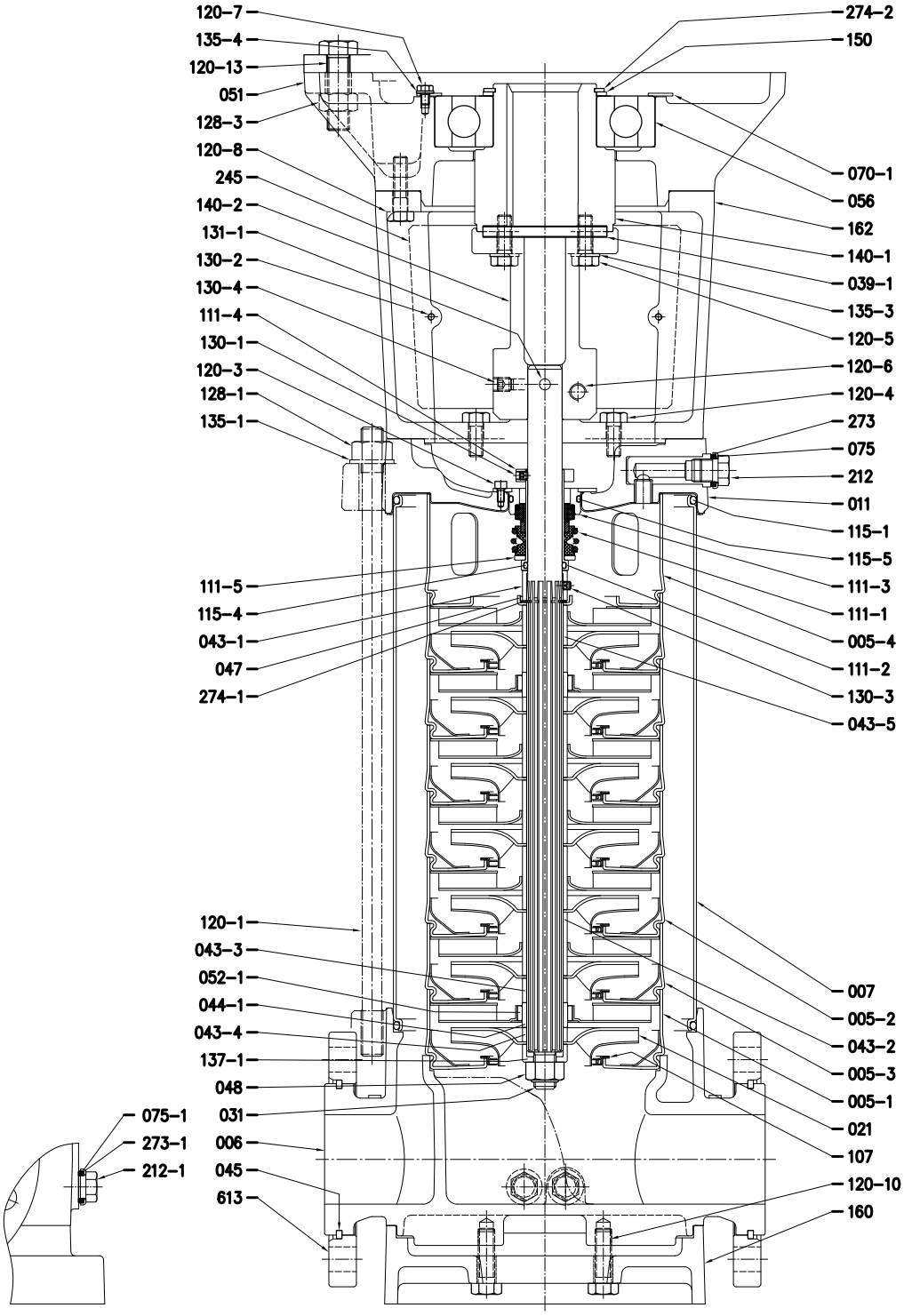

See dimensions page 404

CONSTRUCTION

60Hz

Rev. G

EVM(.) 32
Pump with double ball bearing

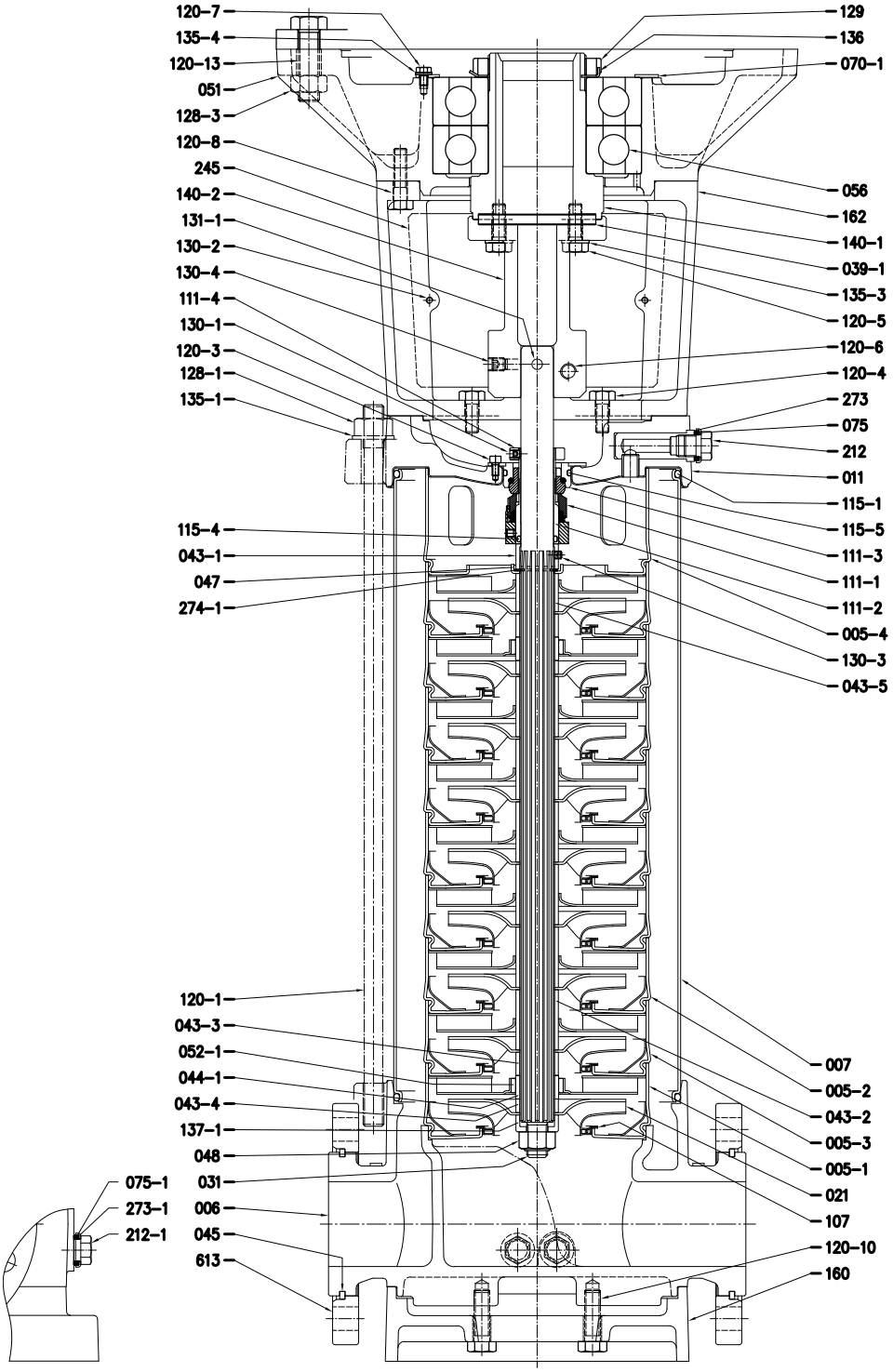

See dimensions page 404

CONSTRUCTION

60Hz

Rev. G

EVMG 32
Pump without ball bearing

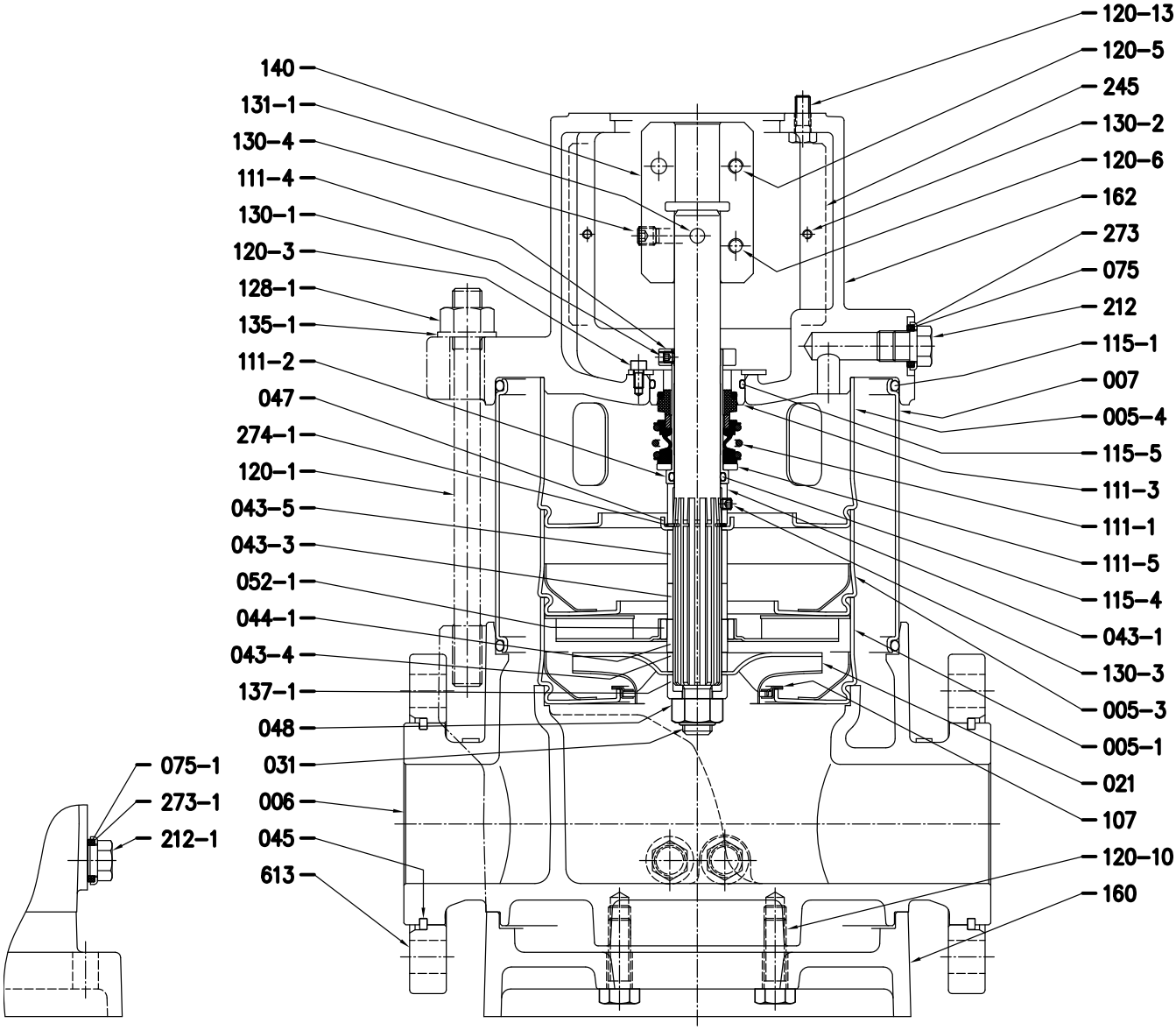

See dimensions page 404

CONSTRUCTION

60Hz

Rev. G

EVMG 32
Pump with single ball bearing

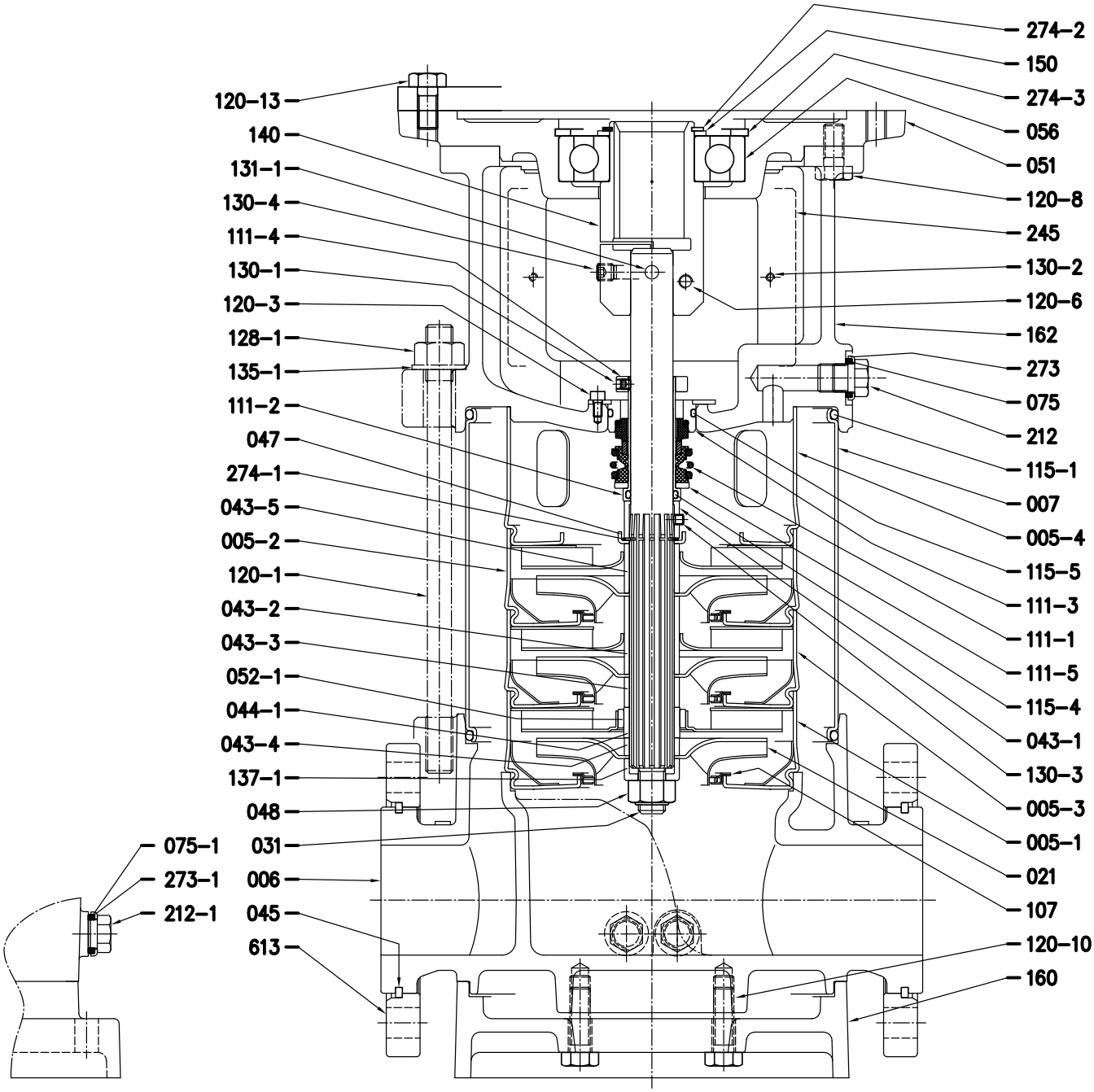

See dimensions page 404

CONSTRUCTION

60Hz

Rev. G

EVMG 32
Pump with single ball bearing

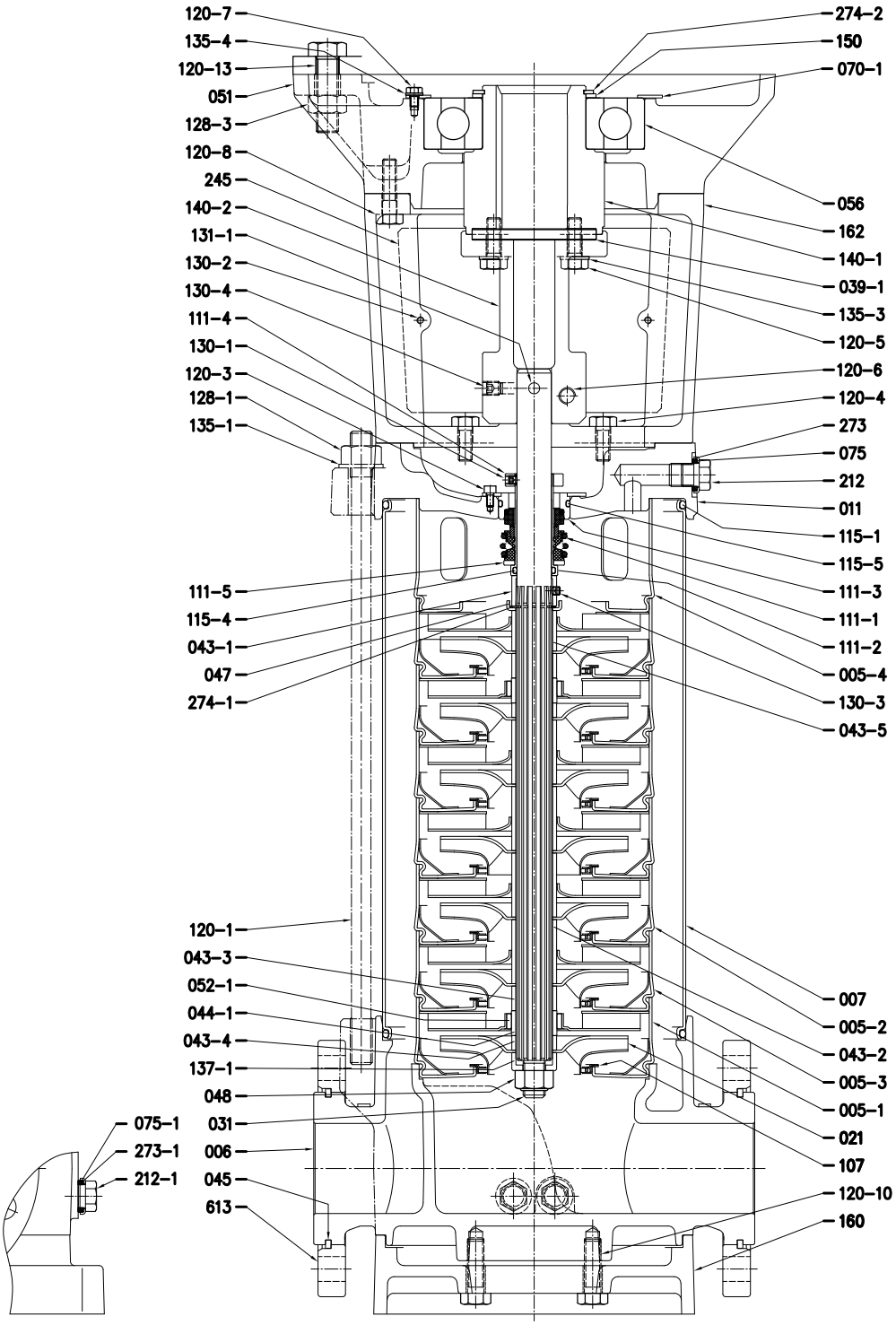

See dimensions page 404

CONSTRUCTION

60Hz

Rev. G

EVMG 32
Pump with double ball bearing

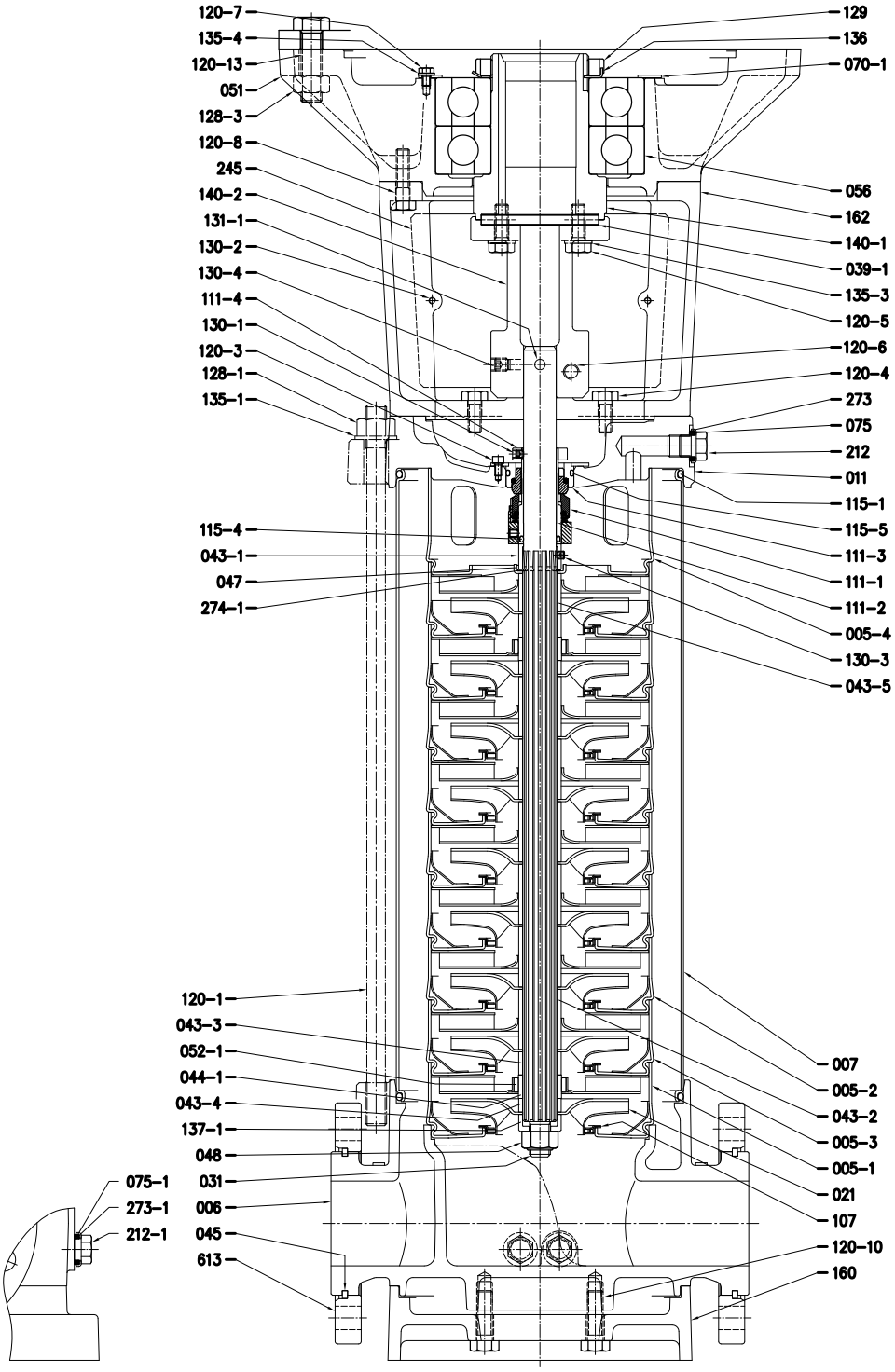

See dimensions page 404

CONSTRUCTION

60Hz

Rev. G

EVM(.) 45
Pump with single ball bearing

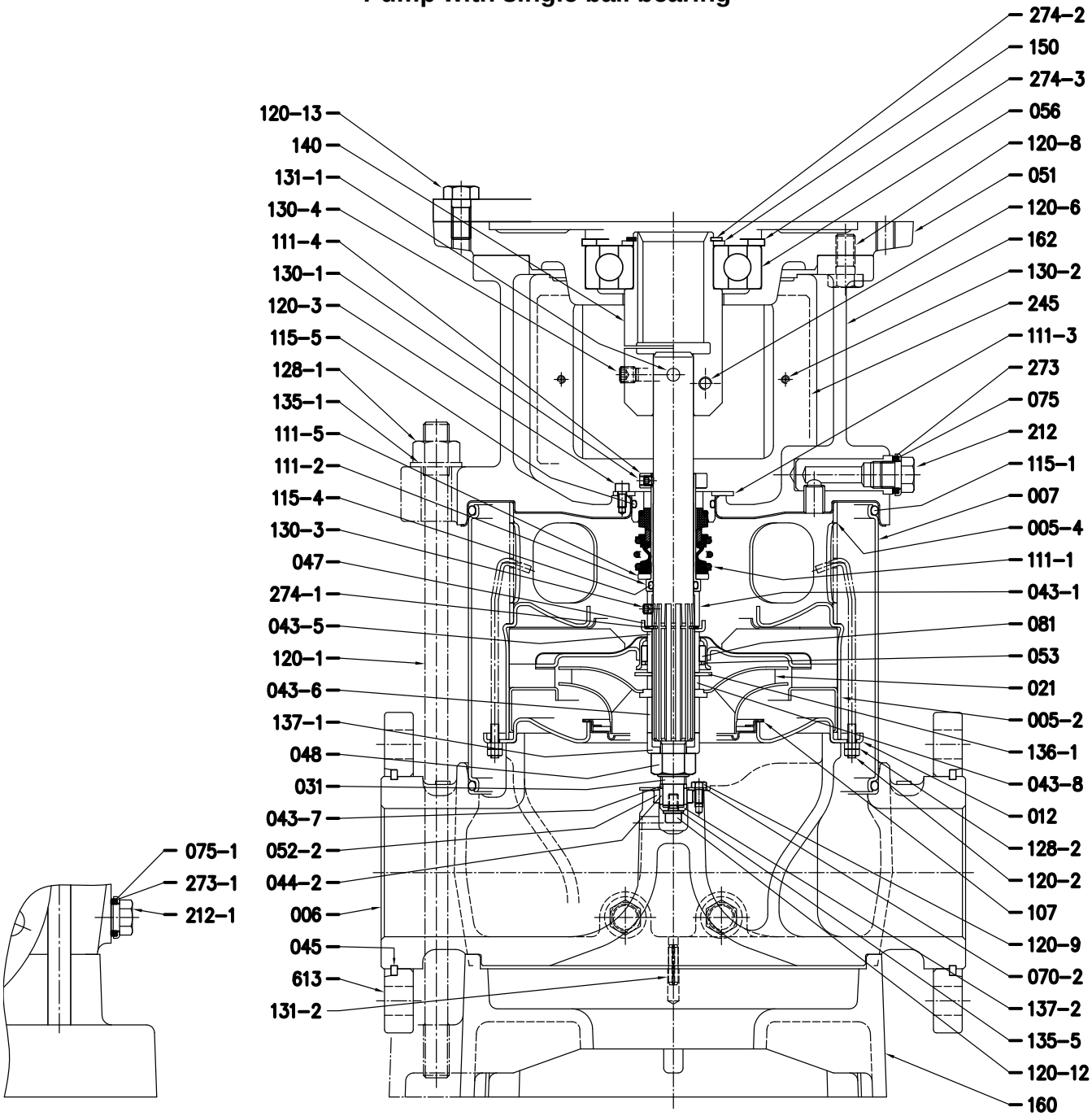

See dimensions page 405

CONSTRUCTION

60Hz

Rev. G

EVM(.) 45
Pump with single ball bearing

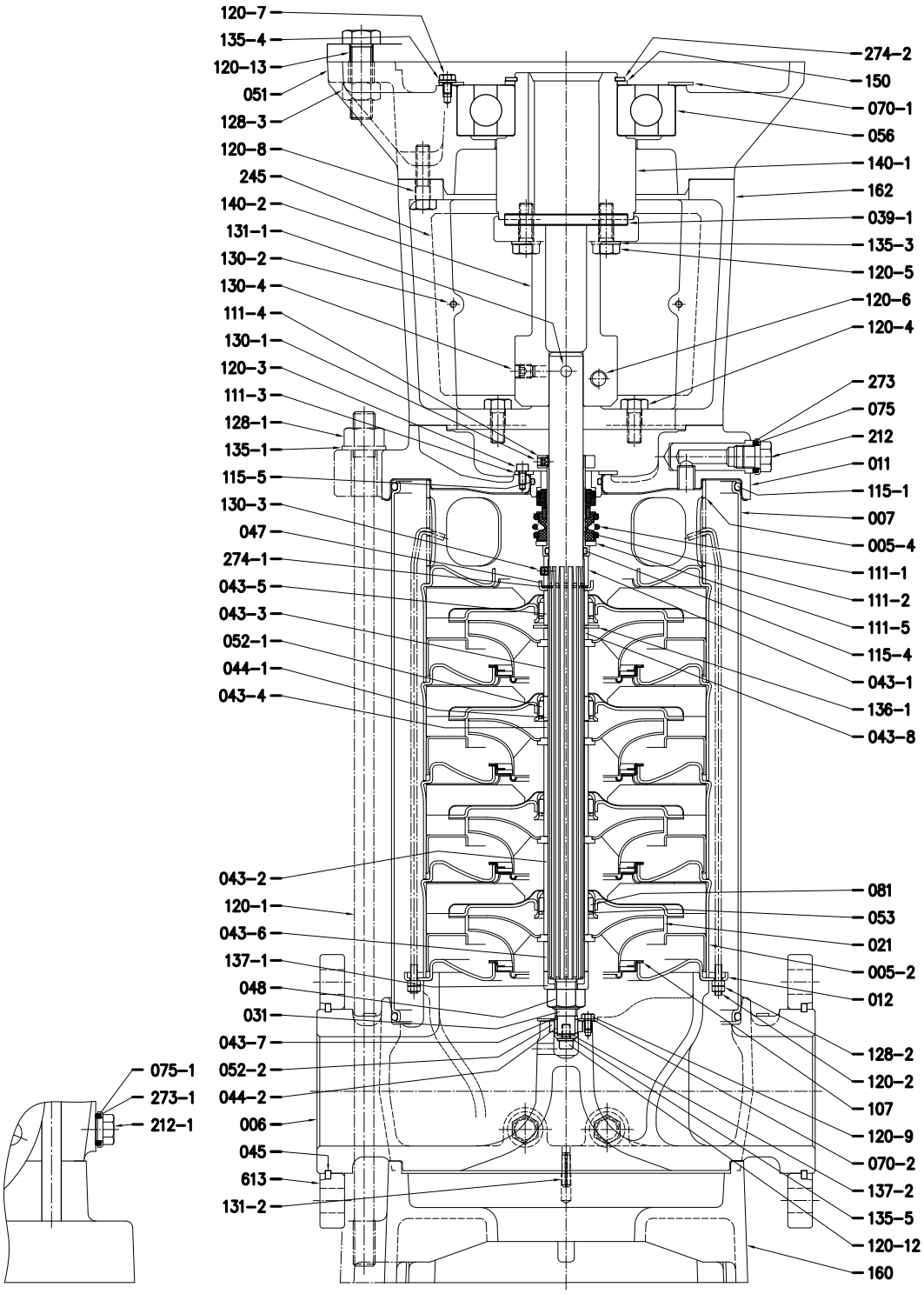

See dimensions page 405

CONSTRUCTION

60Hz

Rev. G

EVM(.) 45
Pump with double ball bearing

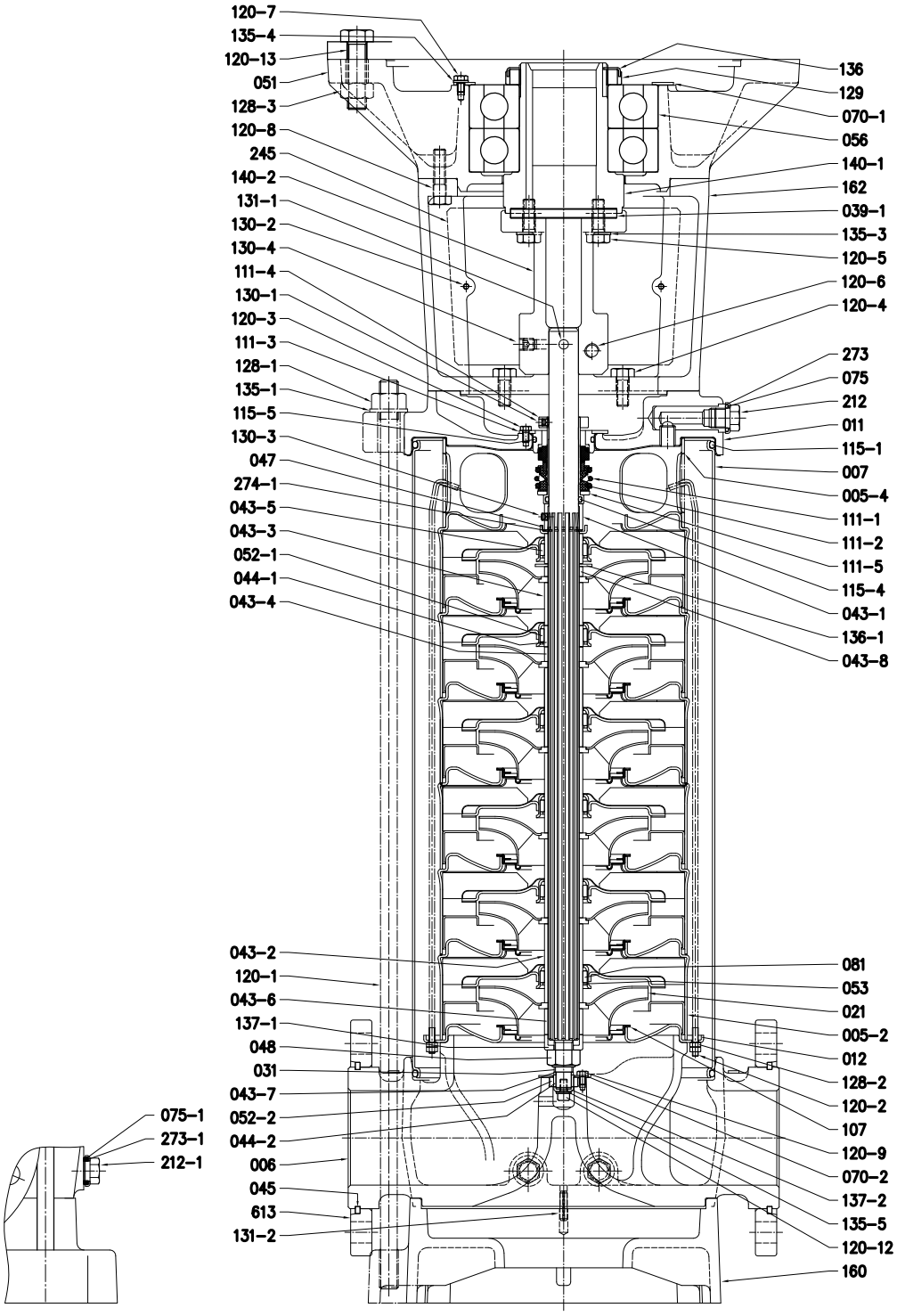

See dimensions page 405

CONSTRUCTION

60Hz

Rev. G

EVMG 45
Pump with single ball bearing

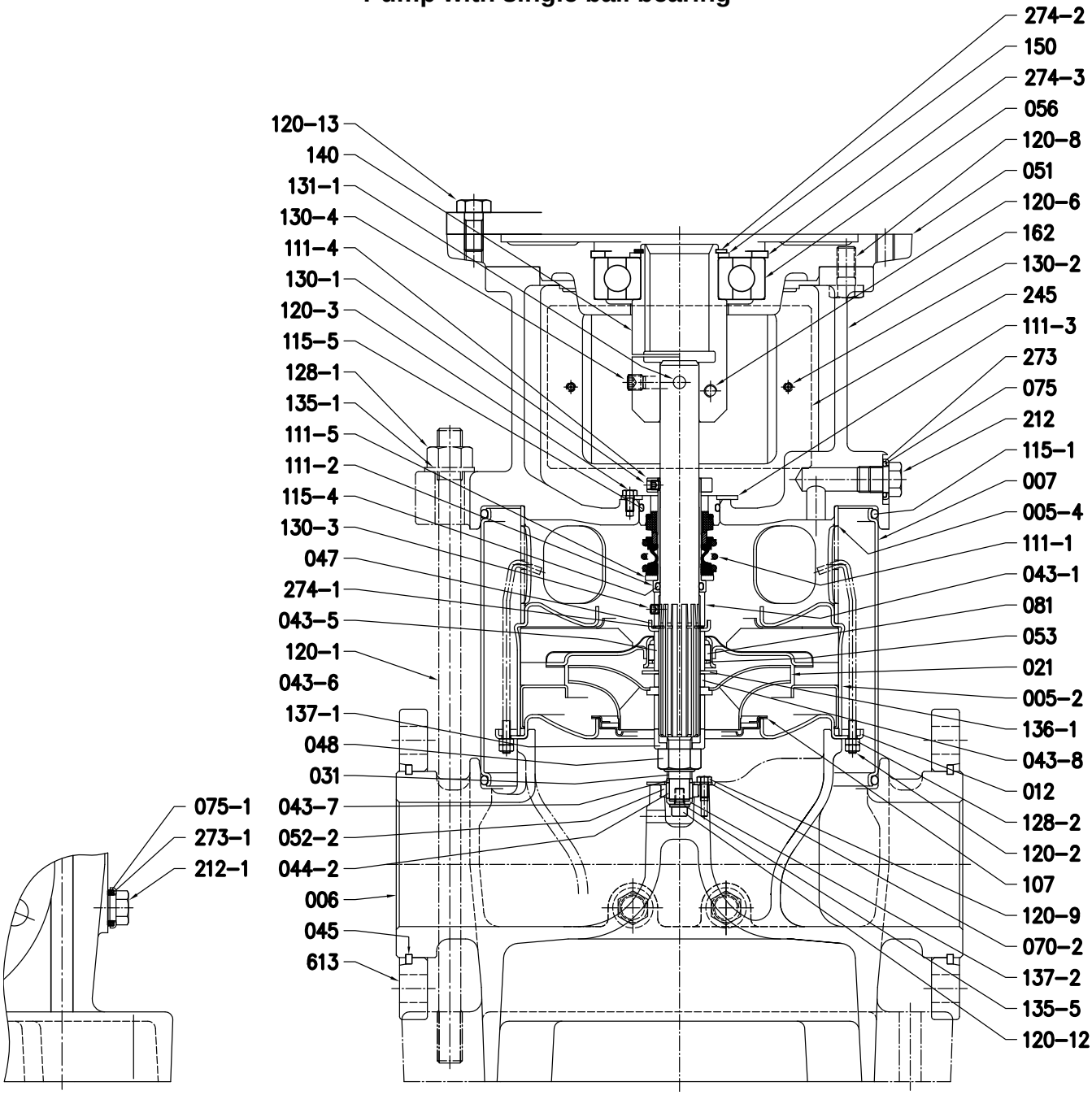

See dimensions page 405

CONSTRUCTION

60Hz

Rev. G

EVMG 45
Pump with single ball bearing

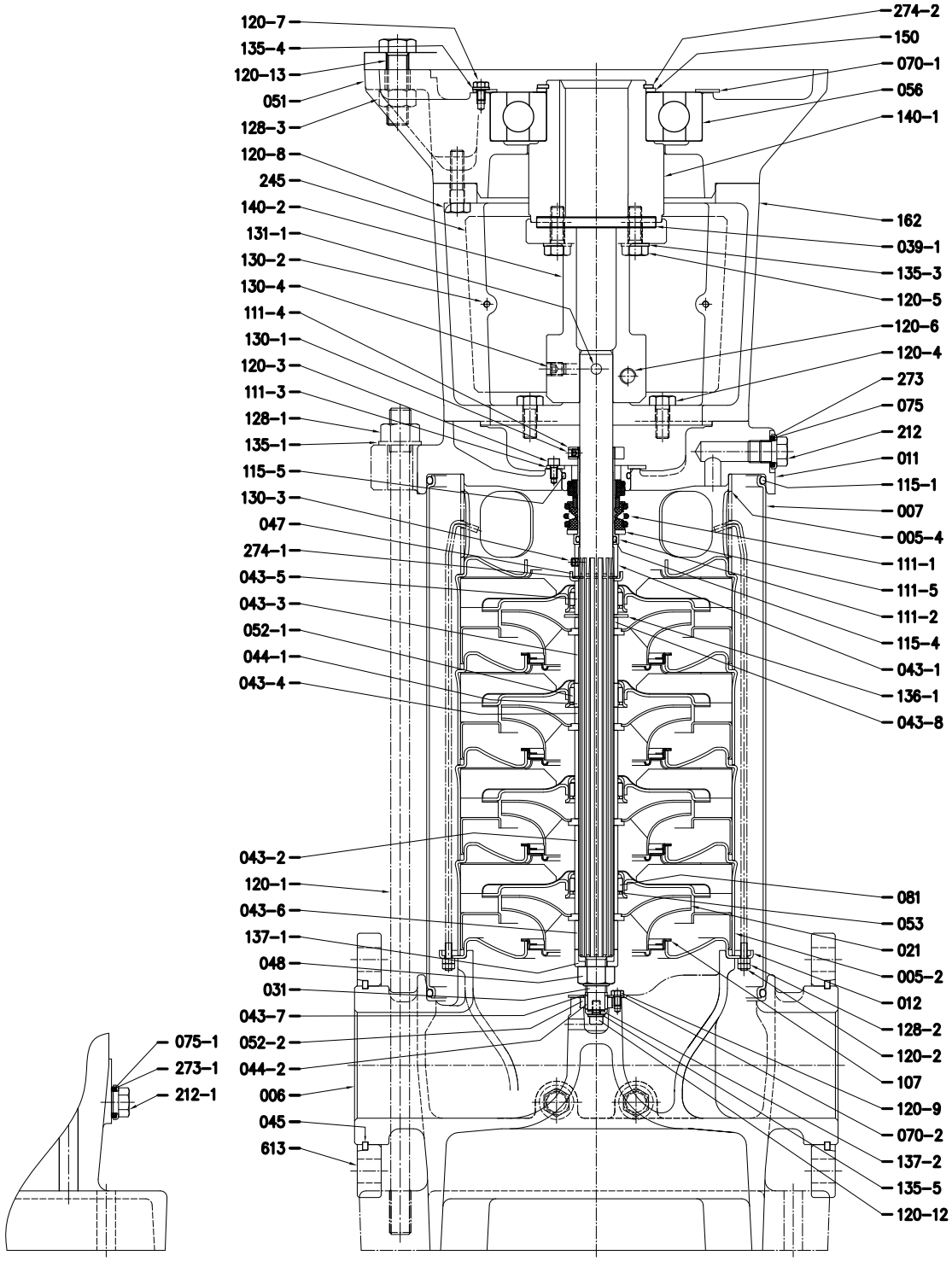

See dimensions page.405

CONSTRUCTION

60Hz

Rev. G

EVMG 45
Pump with double ball bearing

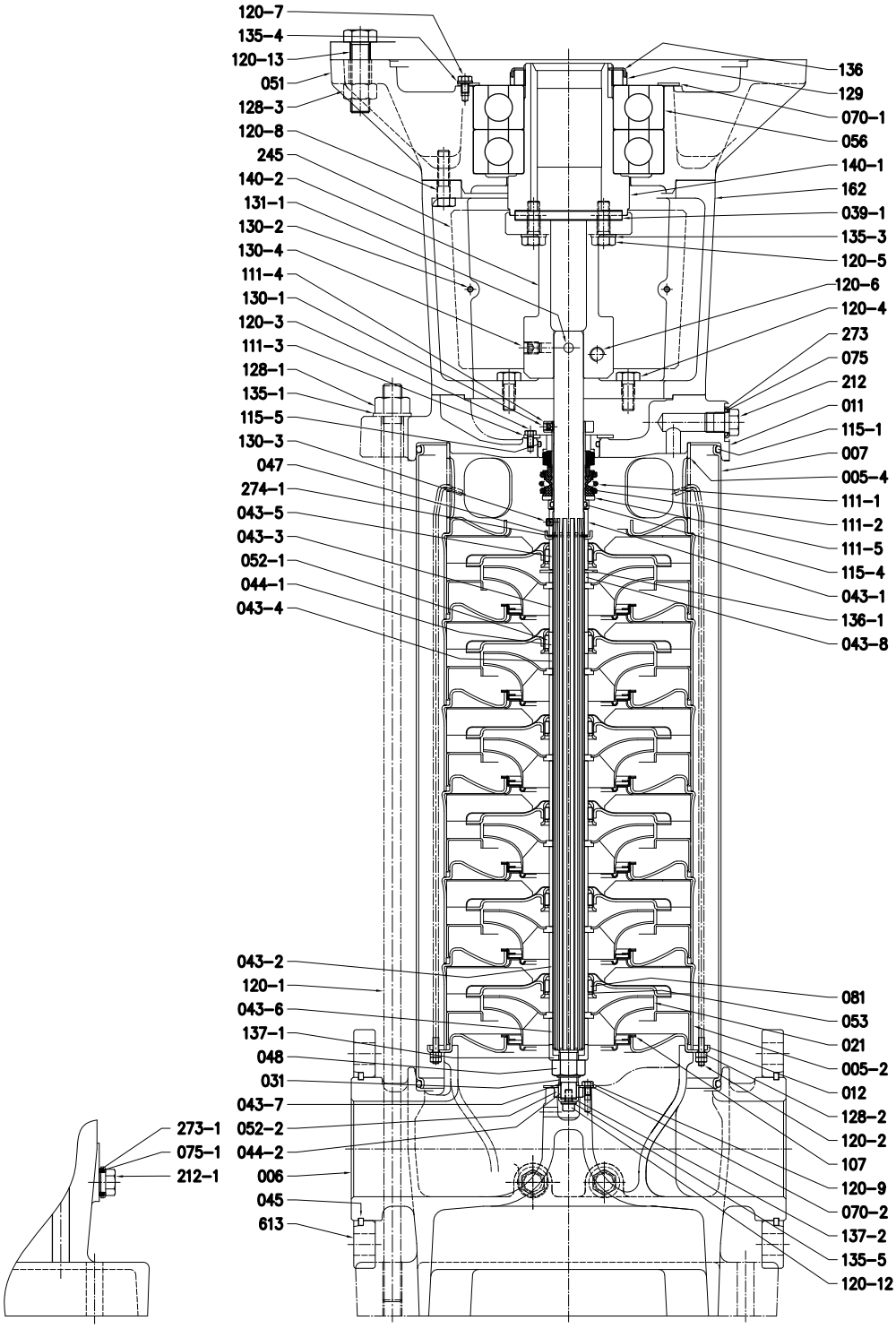

See dimensions page 405

CONSTRUCTION

60Hz

Rev. G

EVM(.) 64
Pump with single ball bearing

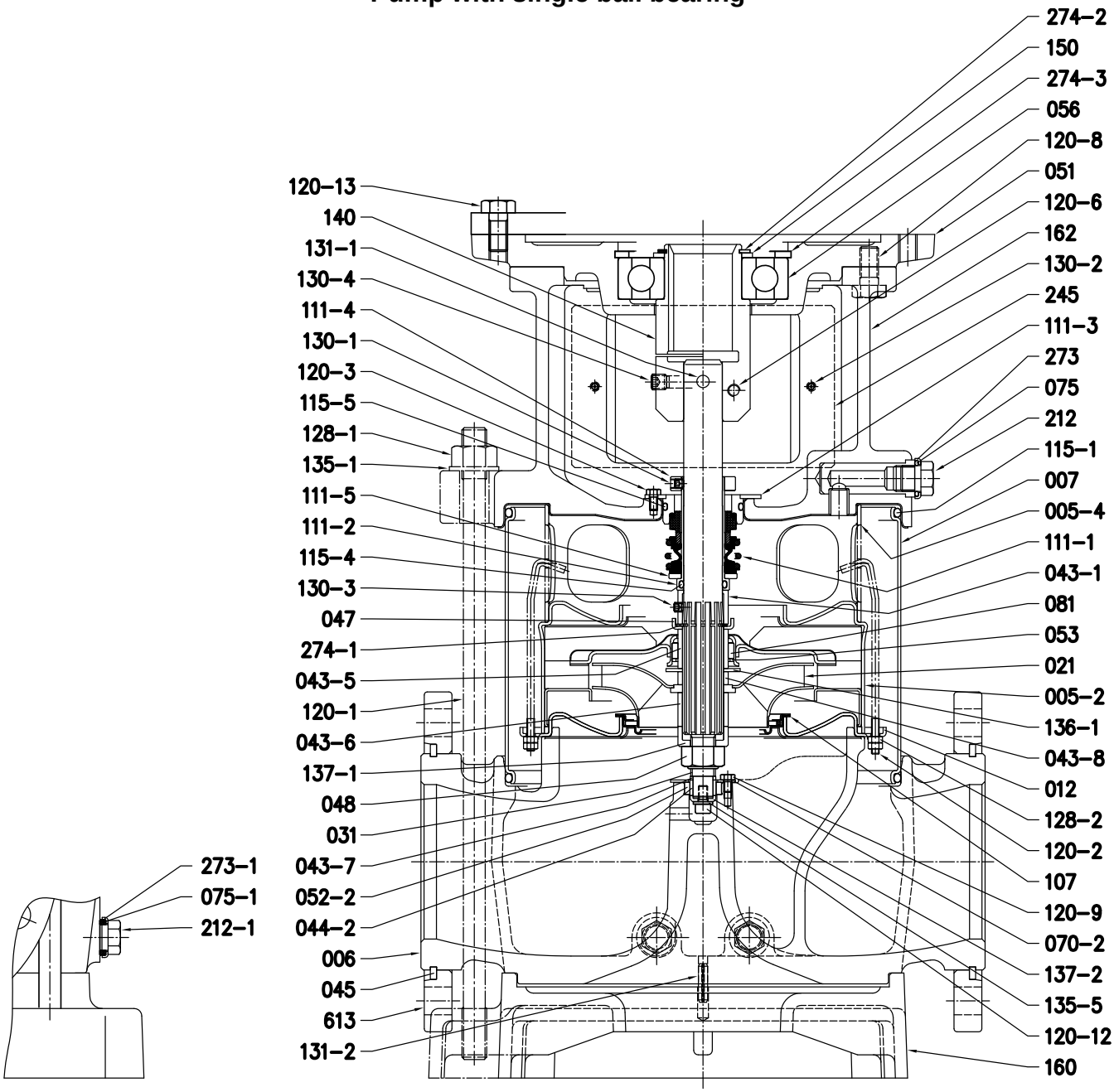

See dimensions page 406

CONSTRUCTION

60Hz

Rev. G

EVM(.) 64
Pump with single ball bearing

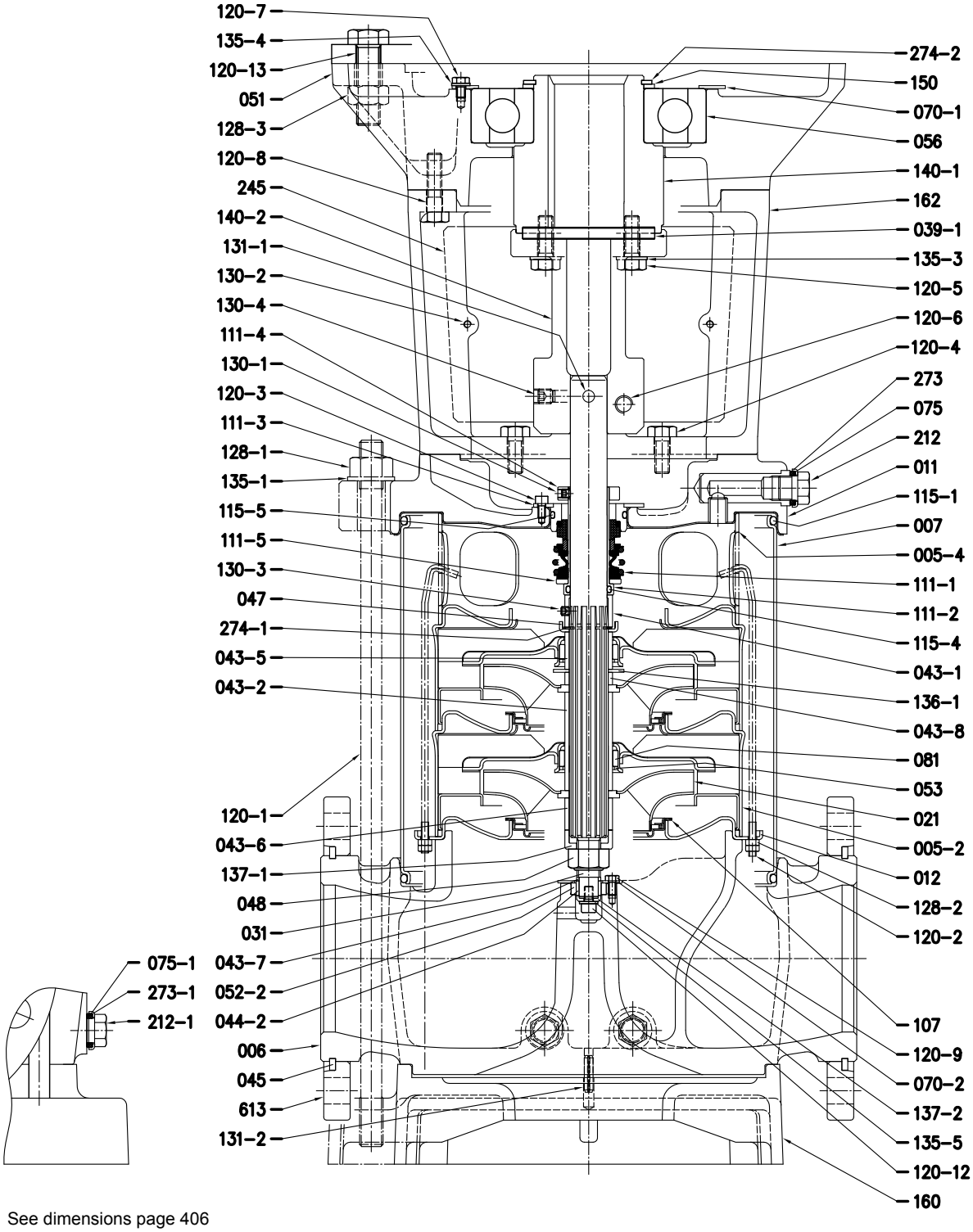

See dimensions page 406

CONSTRUCTION

60Hz

Rev. G

EVM(.) 64
Pump with double ball bearing

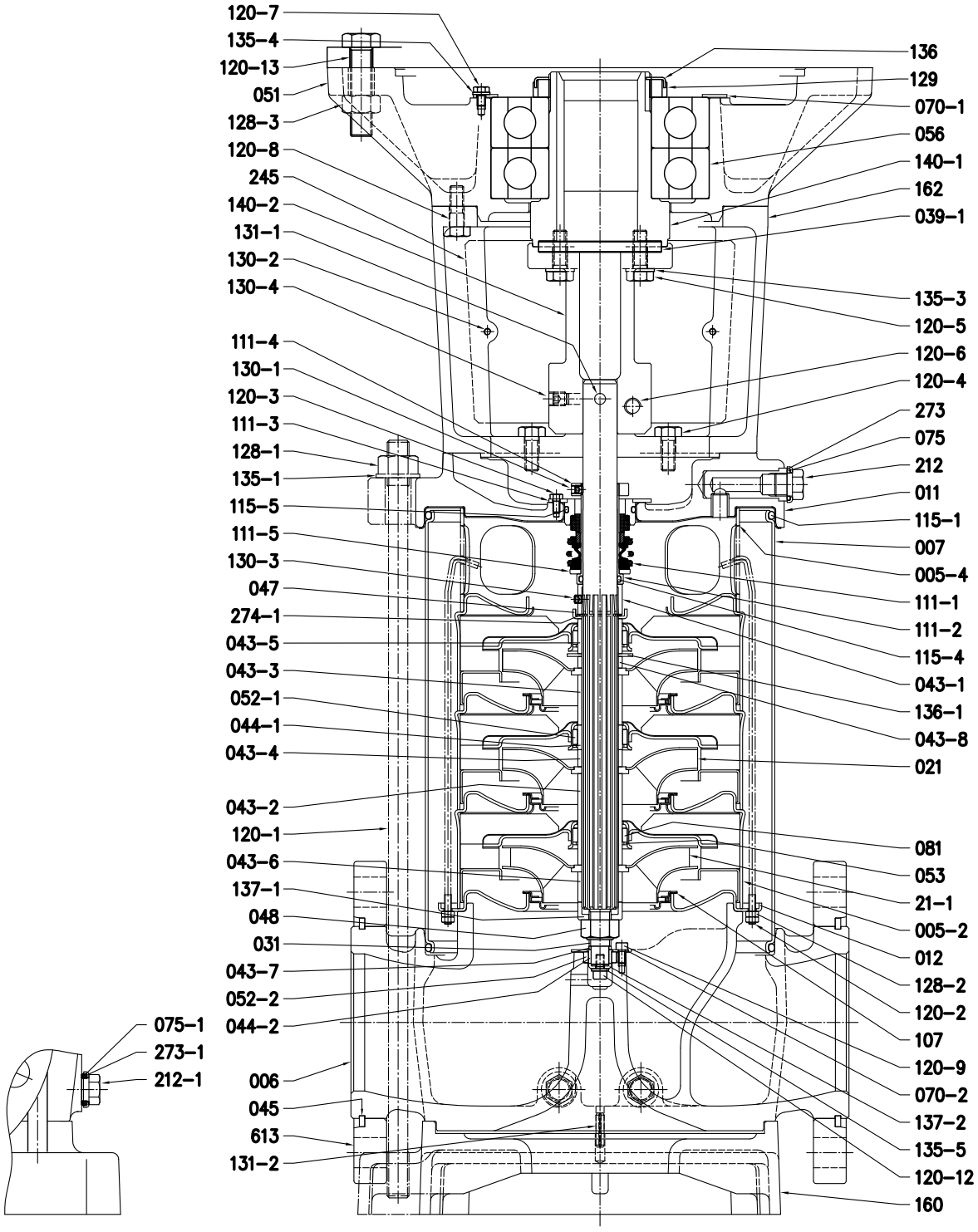

See dimensions page 406

CONSTRUCTION

60Hz

Rev. G

EVMG 64
Pump with single ball bearing

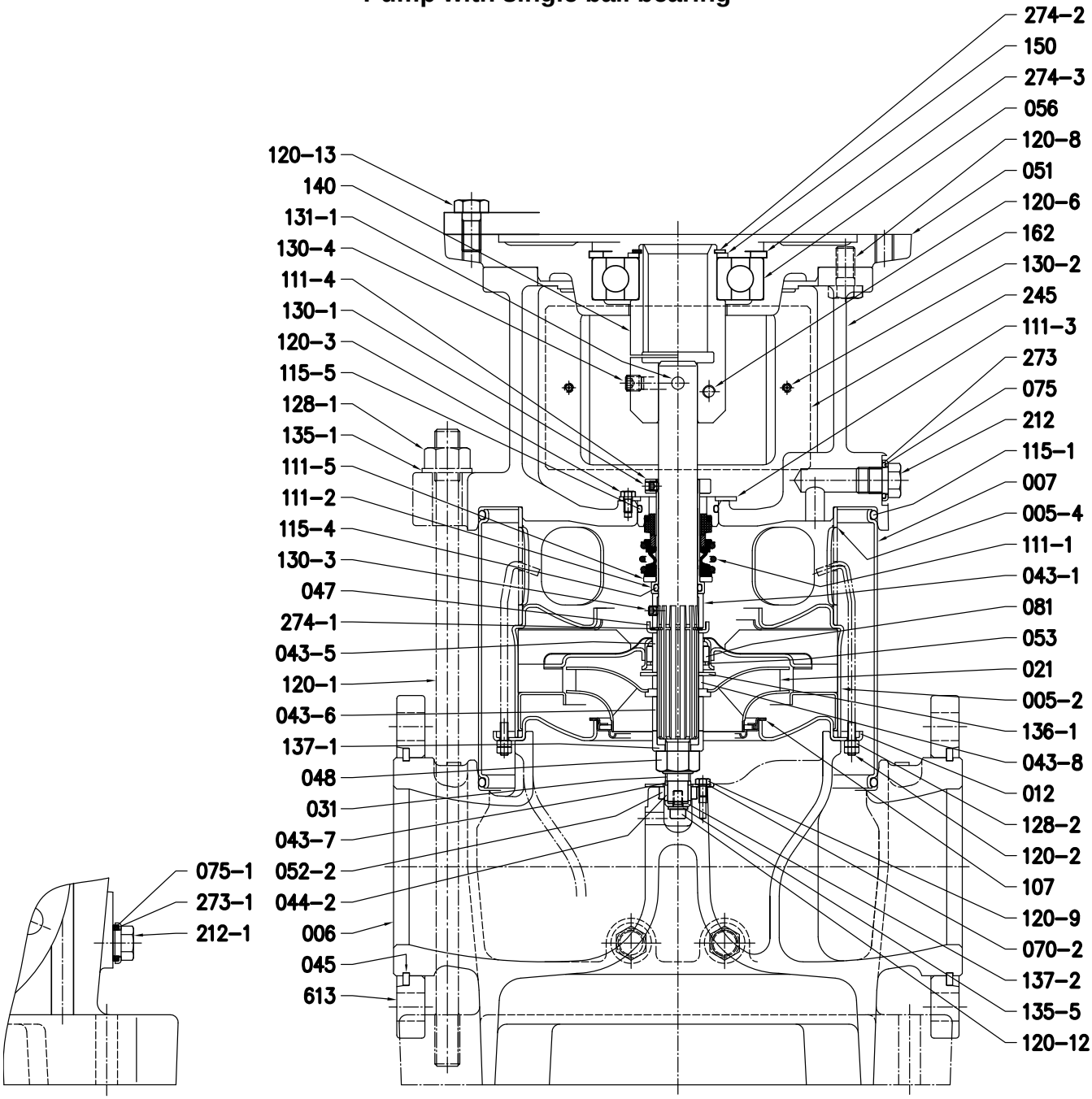

See dimensions page 406

CONSTRUCTION

60Hz

Rev. G

EVMG 64
Pump with single ball bearing

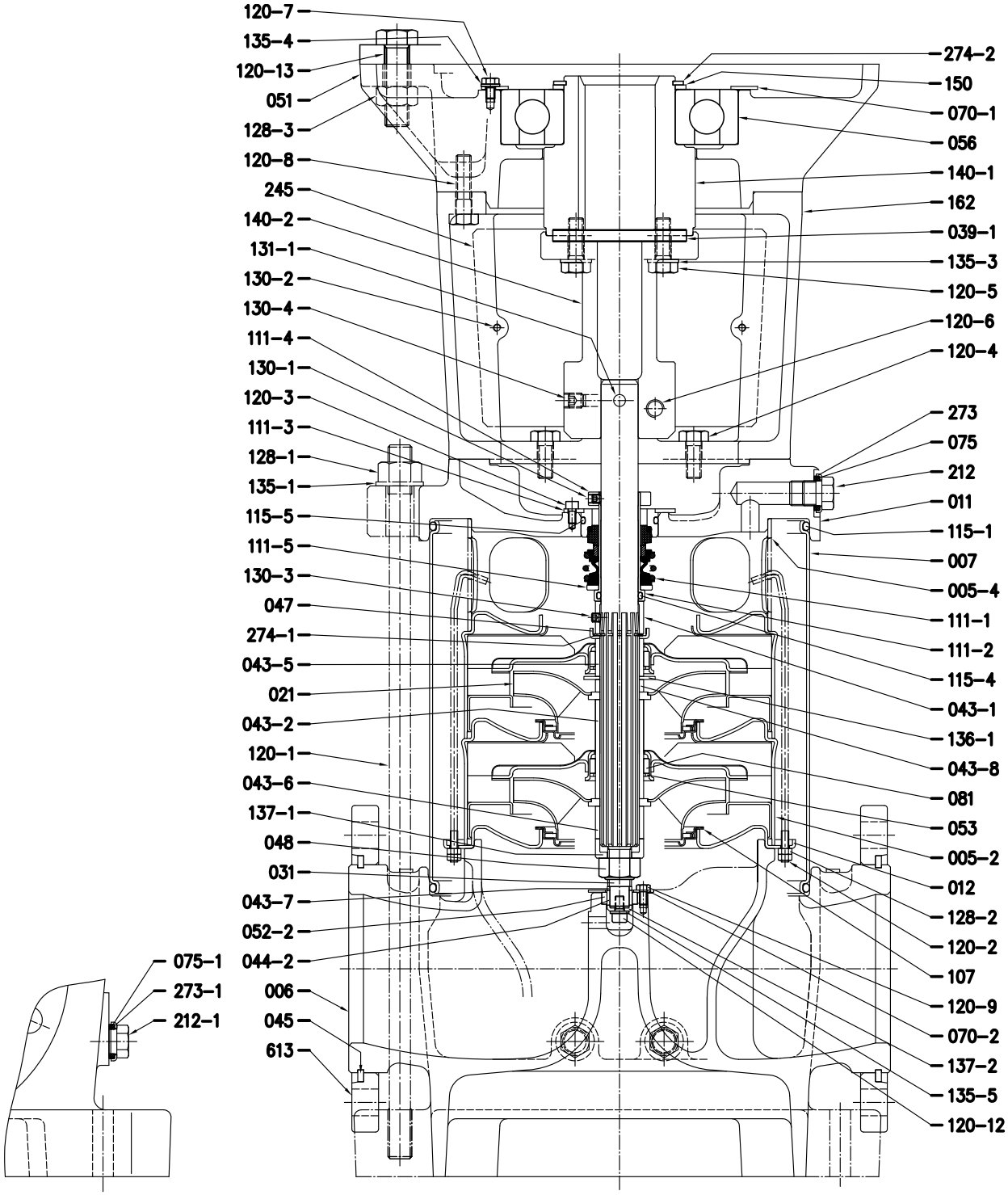

See dimensions page 406

CONSTRUCTION

60Hz

Rev. G

EVMG 64
Pump with double ball bearing

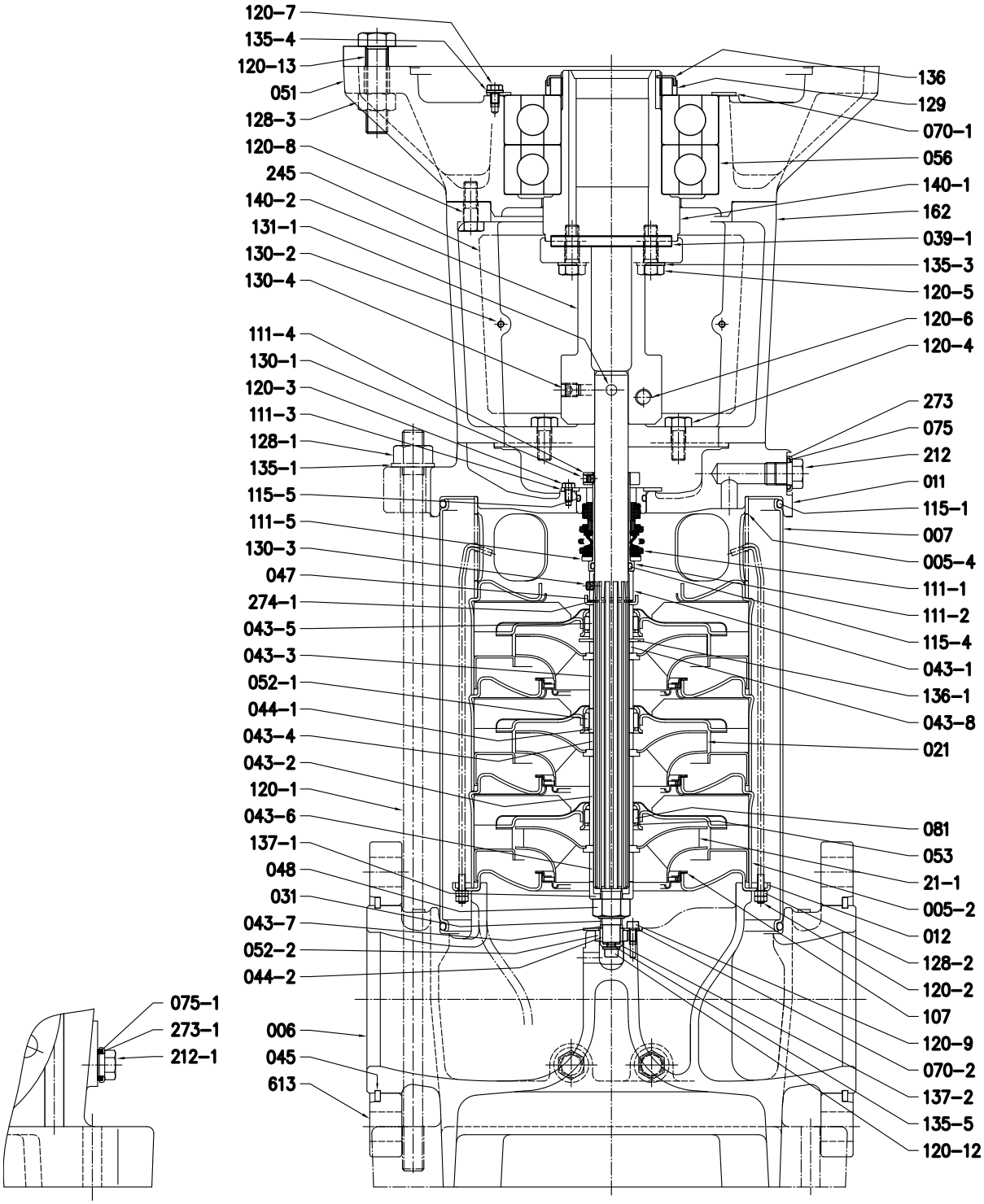

See dimensions page 406

SECTIONAL VIEW TABLE
EVM(.) 3-5

N°	PART NAME	MATERIAL			DIMENSIONS	STANDARD	Q.TY
		EVMG	EVM	EVML			
005-1	Suction casing	EN 1.4301(AISI 304)		EN 1.4401 (AISI 316)			1
005-2	Intermediate casing	EN 1.4301(AISI 304)		EN 1.4401 (AISI 316)			[1]
005-3	Intermediate casing bearing	EN 1.4301(AISI 304)		EN 1.4401 (AISI 316)			[1]
005-4	Discharge casing	EN 1.4301(AISI 304)		EN 1.4401 (AISI 316)			1
006	Bottom casing	Cast iron EN-GJL-200-EN 1561	EN 1.4301(AISI 304)	EN 1.4401 (AISI 316)			1
007	Outer casing	EN 1.4301(AISI 304)		EN 1.4401 (AISI 316)			1
021	Impeller	EN 1.4301(AISI 304)		EN 1.4401 (AISI 316)			[1]
031	Shaft	EN 1.4401 (AISI 316)					1
043-1	Shaft sleeve (mechanical seal)	EN 1.4301(AISI 304)		EN 1.4401 (AISI 316)			1
043-2	Shaft sleeve (intermediate)	EN 1.4301(AISI 304)		EN 1.4401 (AISI 316)			[1]
043-3	Shaft sleeve (bearing)	EN 1.4301(AISI 304)		EN 1.4401 (AISI 316)			[1]
043-5	Shaft sleeve (last stage)	EN 1.4301(AISI 304)		EN 1.4401 (AISI 316)			[1]
043-6	Shaft sleeve (adjustment)	EN 1.4301(AISI 304)		EN 1.4401 (AISI 316)			[1]
044-1	Shaft sleeve bearing	Tungsten carbide					[1]
046	Split ring (mechanical seal)	EN 1.4301(AISI 304)		EN 1.4401 (AISI 316)			[1]
047	Ring holder	EN 1.4301(AISI 304)		EN 1.4401 (AISI 316)			1
048	Impeller nut	A2-70 UNI 7323 with inox insert		A4-70 UNI 7323 with inox insert	M8		1
051	Motor adapter	Cast iron EN-GJL-200-EN 1561					[1]
052-1	Bearing	Tungsten carbide					[1]
056	Ball bearing	See table pag.352					[1]
075	O-ring (plug)	EPDM		FPM			1
075-1	O-ring (plug) EVM, EVML	EPDM		FPM			2
	O-ring (plug) EVMG						4
107	Liner ring	PTFE / EN 1.4301(AISI 304)		PTFE / EN 1.4401 (AISI 316)			[1]
111	Mechanical seal	Silicon carbide/Carbon/EPDM		Silicon carbide/Carbon/FPM			1
111-3	Mechanical seal seat	EN 1.4301(AISI 304)		EN 1.4401 (AISI 316)			1
115-1	O-ring (outer casing)	EPDM		FPM	129.54X5.34	OR 6510	2
115-3	O-ring (flange)	/	EPDM	FPM	50X3.1		[1]
115-5	O-ring (mechanical seal)	EPDM		FPM	23.47X2.62	OR 3093	1
117	Flange gasket	EPDM	/	/			[1]
120-1	Tie rod	Galvanized steel 6.8 strenght class ISO 898/1					4
120-3	Screw	A2-70 UNI 7323			M4X6	UNI 5931	4
120-5	Screw for coupling	Galvanized steel 8.8 strenght class ISO 898/1			M6X16	UNI 5931	[1]

[1] See table on page 352

SECTIONAL VIEW TABLE
EVM(.) 3-5

N°	PART NAME		MATERIAL EVMG	MATERIAL EVM	MATERIAL EVML	DIMENSIONS	STANDARD	Q.TY
120-6	Screw for coupling	EVM3, EVM5 2 to 12	Galvanized steel			M6X16	UNI 5931	[1]
		EVM5 14 to 19				M8X20	UNI 5931	
120-8	Screw (motor adapter)		Galvanized steel 8.8 strenght class ISO 898/1			M12X25	UNI 5739	[1]
120-11	Screw for counterflange		A2-70 UNI 7323			M10X20	UNI 5739	[1]
120-13	Screw for motor	EVM3 2 to 6, EVM5 2, 3	Galvanized steel 8.8 strenght class ISO 898/1			M6X16	UNI 5739	4
		EVM3 7 to 12, EVM5 4 to 6				M8X20	UNI 5739	
		EVM3 13 to 18, EVM5 7 to 12				M8X30	UNI 5739	
		EVM5 14 to 19				M12X25	UNI 5739	
128-1	Nut for tie rod		Galvanized steel			M10	UNI 5588	4
128-5	Nut for tie rod		/	A2-70 UNI 7323		M10	UNI 7474	4
128-6	Nut for coupling		Galvanized steel			M6	UNI 5588	[1]
130-2	Screw for coupling guard		A2-70 UNI 7323			M5X6	UNI 7687	4
130-4	Set-screw		Carbon steel			M5X6	UNI 5929	[1]
131-1	Pin for shaft		Carbon steel					1
135-1	Washer		Galvanized steel			10,5X21X2	UNI 6592	4
135-6	Washer knurled		Carbon steel			D6		[1]
137-1	Impeller spacer		EN 1.4301(AISI 304)		EN 1.4401 (AISI 316)			1
140	Coupling	UP TO 2.2 kW	Die cast Aluminium EN AB-AlSi11Cu2 (Fe)					2
		3 kW AND ABOVE	Brass OT 58 UNI 5705					1
150	Spacer		Carbon steel					[1]
160	Base		/	Die cast Aluminium EN AB-AlSi11Cu2 (Fe)				1
162	Motor bracket		Cast iron EN-GJL-200-EN 1561	Cast iron + EN 1.4301(AISI 304)	Cast iron + EN 1.4401 (AISI 316)			1
212	Plug		EN 1.4301(AISI 304)		EN 1.4401 (AISI 316)			1
212-1	Plug	EVM, EVML	EN 1.4301(AISI 304)		EN 1.4401 (AISI 316)			2
		EVMG						4
219	Counter flange		Galvanized steel	EN 1.4301(AISI 304)	EN 1.4401 (AISI 316)			[1]
245	Coupling guard		EN 1.4301(AISI 304)					2
273	Washer (plug)		EN 1.4301(AISI 304)		EN 1.4401 (AISI 316)			1
273-1	Washer (plug)	EVM, EVML	EN 1.4301(AISI 304)		EN 1.4401 (AISI 316)			2
		EVMG						4
274-2	C-type snap ring (coupling)	EVM3 13 to 18, EVM5 7 to 12	Carbon steel TC 80			D40	UNI 7435	[1]
		EVM5 14 to 19				D50		
274-3	C-type snap ring (bracket)	EVM3 13 to 18 , EVM5 7 to 12	Carbon steel TC 80			D90	UNI 7437	[1]
		EVM5 14 to 19				D110		

[1] See table on page 352

SECTIONAL VIEW TABLE
EVM(.) 10

Nº	PART NAME		MATERIAL EVMG	MATERIAL EVM	MATERIAL EVML	DIMENSIONS	STANDARD	Q.TY
005-1	Suction casing		EN 1.4301(AISI 304)		EN 1.4401 (AISI 316)			1
005-2	Intermediate casing		EN 1.4301(AISI 304)		EN 1.4401 (AISI 316)			[1]
005-3	Intermediate casing bearing		EN 1.4301(AISI 304)		EN 1.4401 (AISI 316)			[1]
005-4	Discharge casing		EN 1.4301(AISI 304)		EN 1.4401 (AISI 316)			1
006	Bottom casing		Cast iron EN-GJL-200 -EN 1561	EN 1.4301(AISI 304)	EN 1.4401 (AISI 316)			1
007	Outer casing		EN 1.4301(AISI 304)		EN 1.4401 (AISI 316)			1
021	Impeller		EN 1.4301(AISI 304)		EN 1.4401 (AISI 316)			[1]
031	Shaft		EN 1.4401 (AISI 316)					1
043-1	Shaft sleeve (mechanical seal)		EN 1.4301(AISI 304)		EN 1.4401 (AISI 316)			1
043-2	Shaft sleeve (intermediate)		EN 1.4301(AISI 304)		EN 1.4401 (AISI 316)			[1]
043-3	Shaft sleeve (bearing)		EN 1.4301(AISI 304)		EN 1.4401 (AISI 316)			[1]
043-5	Shaft sleeve (last stage)		EN 1.4301(AISI 304)		EN 1.4401 (AISI 316)			[1]
044-1	Shaft sleeve bearing		Tungsten carbide					[1]
047	Ring holder		EN 1.4301(AISI 304)		EN 1.4401 (AISI 316)			1
048	Impeller nut		A2-70 UNI 7323 with inox insert		A4-70 UNI 7323 with inox insert	M10		1
051	Motor adapter		Cast iron EN-GJL-200-EN 1561					[1]
052-1	Bearing		Tungsten carbide					[1]
056	Ball bearing		See table pag.326-327					[1]
070-1	Ring for bearing		EN 1.4301(AISI 304)					[1]
075	O-ring (plug)		EPDM		FPM			1
075-1	O-ring (plug)	EVM, EVML	EPDM		FPM			2
		EVMG						4
107	Liner ring		PTFE / EN 1.4301(AISI 304)		PTFE / EN 1.4401 (AISI 316)			[1]
111	Mechanical seal		Silicon carbide/Carbon/EPDM		Silicon carbide/Carbon/FPM			1
111-3	Mechanical seal seat		EN 1.4301(AISI 304)		EN 1.4401 (AISI 316)			1
115-1	O-ring (outer casing)		EPDM		FPM	164.46X5.34	OR 6645	2
115-3	O-ring (flange)		/	EPDM	FPM	60X3.1		[1]
115-5	O-ring (mechanical seal)		EPDM		FPM	31.34X3.53	OR 4125	1
117	Flange Gasket		EPDM	/	/			[1]
120-1	Tie rod		Galvanized steel 6.8 strenght class ISO 898/1					4
120-3	Screw		A2-70 UNI 7323			M5X6	UNI 5931	4
120-5	Screw for coupling		Galvanized steel 8.8 strenght class ISO 898/1			M6X16	UNI 5931	[1]
120-6	Screw for coupling	EVM10 2 to 3	Galvanized steel			M6X16	UNI 5931	[1]
		EVM10 4 to 12				M8X20	UNI 5931	
		EVM10 14 to 16				M10X25	UNI 5931	
120-7	Screw (bearing)		Galvanized steel 8.8 strenght class ISO 898/1			6X10	UNI 5739	[1]
120-8	Screw (motor adapter)		Galvanized steel			M2X25	UNI 5739	[1]

[1] See table on page 353

SECTIONAL VIEW TABLE
EVM(.) 10

N°	PART NAME		MATERIAL EVMG	MATERIAL EVM	MATERIAL EVML	DIMENSIONS	STANDARD	Q.TY
120-11	Screw for counterflange		A2-70 UNI 7323			M12x20	UNI 5739	[1]
120-13	Screw for motor	EVM10 2 to 3	Galvanized steel 8.8 strenght class ISO 898/1			M8X20	UNI 5739	4
		EVM10 4 to 6				M8X30	UNI 5739	
		EVM10 8 to 12				M12X25	UNI 5739	
		EVM10 14 to 16				M16X65	UNI 5739	
128-1	Nut for tie rod		Galvanized steel			M12	UNI 5588	4
128-3	Nut (motor)		Galvanized steel					[1]
128-5	Nut for tie rod		/	Galvanized steel		M12	UNI 7474	4
128-6	Nut for coupling		Galvanized steel			M6	UNI 5588	[1]
130-2	Screw for coupling guard		A2-70 UNI 7323			M5X6	UNI 7687	4
130-4	Set-screw		Carbon steel			M6X6	UNI 5929	[1]
131-1	Pin for shaft		Carbon steel					1
135-1	Washer		Galvanized steel			13X24X2,5	UNI 6592	4
135-4	Washer (bearing)		Carbon steel					[1]
135-6	Washer knurled		Carbon steel			D6		[1]
137-1	Impeller spacer		EN 1.4301(AISI 304)		EN 1.4401 (AISI 316)			1
140	Coupling	Other models	Brass OT 58 UNI 5705					1
		EVM10 2/3	Die cast Aluminium EN AB-AlSi11Cu2 (Fe)					2
		EVM10 14/16	CF 35 SMn Pb10					1
150	Spacer		Carbon steel					[1]
160	Base		/	Die cast Aluminium EN AB-AlSi11Cu2 (Fe)				1
162	Motor bracket		Cast iron EN-GJL-200 -EN 1561	Cast iron + EN 1.4301(AISI 304)	Cast iron + EN 1.4401 (AISI 316)			1
212	Plug		EN 1.4301(AISI 304)		EN 1.4401 (AISI 316)			1
212-1	Plug	EVM, EVML	EN 1.4301(AISI 304)		EN 1.4401 (AISI 316)			2
		EVMG						4
219	Counter flange		Galvanized steel	EN 1.4301(AISI 304)	EN 1.4401 (AISI 316)			[1]
245	Coupling guard		EN 1.4301(AISI 304)					2
273	Washer (plug)		EN 1.4301(AISI 304)		EN 1.4401 (AISI 316)			1
273-1	Washer (plug)	EVM, EVML	EN 1.4301(AISI 304)		EN 1.4401 (AISI 316)			2
		EVMG						4
274-1	C-type snap ring (mechanical seal)		EN 1.4301(AISI 304)		EN 1.4401 (AISI 316)	D.16 JIS B2804-1978		1
274-2	C-type snap ring (coupling)	EVM10 4 to 6	Carbon steel TC 80			D40	UNI 7435	[1]
		EVM10 8 to 12				D50		
		EVM10 14 to 16				D65		
274-3	C-type snap ring (bracket)	EVM 10 4 to 6	Carbon steel TC 80			90	UNI 7437	[1]
		EVM 10 8 to 12				110		

[1] See table on page 353

SECTIONAL VIEW TABLE
EVM(.) 18

N°	PART NAME		MATERIAL EVMG	MATERIAL EVM	MATERIAL EVML	DIMENSIONS	STANDARD	Q.TY
005-1	Suction casing		EN 1.4301(AISI 304)		EN 1.4401 (AISI 316)			1
005-2	Intermediate casing		EN 1.4301(AISI 304)		EN 1.4401 (AISI 316)			[1]
005-3	Intermediate casing bearing		EN 1.4301(AISI 304)		EN 1.4401 (AISI 316)			[1]
005-4	Discharge casing		EN 1.4301(AISI 304)		EN 1.4401 (AISI 316)			1
006	Bottom casing		Cast iron EN-GJL-200 -EN 1561	EN 1.4301(AISI 304)	EN 1.4401 (AISI 316)			1
007	Outer casing		EN 1.4301(AISI 304)		EN 1.4401 (AISI 316)			1
021	Impeller		EN 1.4301(AISI 304)		EN 1.4401 (AISI 316)			[1]
031	Shaft		EN 1.4401 (AISI 316)					1
043-1	Shaft sleeve (mechanical seal)		EN 1.4301(AISI 304)		EN 1.4401 (AISI 316)			1
043-2	Shaft sleeve (intermediate)		EN 1.4301(AISI 304)		EN 1.4401 (AISI 316)			[1]
043-3	Shaft sleeve (bearing)		EN 1.4301(AISI 304)		EN 1.4401 (AISI 316)			[1]
043-5	Shaft sleeve (last stage)		EN 1.4301(AISI 304)		EN 1.4401 (AISI 316)			[1]
044-1	Shaft sleeve bearing		Tungsten carbide					[1]
047	Ring holder		EN 1.4301(AISI 304)		EN 1.4401 (AISI 316)			1
048	Impeller nut		A2-70 UNI 7323 with inox insert		A4-70 UNI 7323 with inox insert	M12		1
051	Motor adapter		Cast iron EN-GJL-200-EN 1561					[1]
052-1	Bearing		Tungsten carbide					[1]
056	Ball bearing		See table pag.326-327					[1]
070-1	Ring for bearing		EN 1.4301(AISI 304)					[1]
075	O-ring (plug)		EPDM		FPM			1
075-1	O-ring (plug)	EVM, EVML	EPDM		FPM			2
		EVMG						4
107	Liner ring		PTFE / EN 1.4301(AISI 304)		PTFE / EN 1.4401 (AISI 316)			[1]
111	Mechanical seal		Silicon carbide/Carbon/EPDM		Silicon carbide/Carbon/FPM			1
111-3	Mechanical seal seat		EN 1.4301(AISI 304)		EN 1.4401 (AISI 316)			1
115-1	O-ring (outer casing)		EPDM		FPM	164,46X5,34	OR 6645	2
115-5	O-ring (mechanical seal)		EPDM		FPM	36,1X3,53	OR 4143	1
120-1	Tie rod		Galvanized steel 6.8 strenght class ISO 898/1					4
120-3	Screw		A2-70 UNI 7323			M5X6	UNI 5931	4
120-5	Screw for coupling		Galvanized steel 8.8 strenght class ISO 898/1			M6X16	UNI 5931	[1]
120-6	Screw for coupling	EVM 18 1	Galvanized steel			M6X16	UNI 5931	[1]
		EVM18 2 to 5				M8X20	UNI 5931	
		EVM18 6 to 12				M10X25	UNI 5931	

[1] See table on page 353

SECTIONAL VIEW TABLE
EVM(.) 18

N°	PART NAME		MATERIAL EVMG	MATERIAL EVM	MATERIAL EVML	DIMENSIONS	STANADRD	Q.TY
120-7	Screw (bearing)		Galvanized steel 8.8 strenght class ISO 898/1			6X10	UNI 5739	[1]
120-8	Screw (motor adapter)		Galvanized steel 8.8 strenght class ISO 898/1			M12X25	UNI 5739	[1]
120-13	Screw for motor	EVM18 1 to 2	Galvanized steel 8.8 strenght class ISO 898/1			M8X20	UNI 5739	4
		EVM18 3 to 5				M12X25	UNI 5739	
		EVM18 6 to 12				M16X65	UNI 5739	
128-1	Nut for tie rod		Galvanized steel			M12	UNI 5588	4
128-3	Nut (motor)		Galvanized steel					[1]
128-5	Nut for tie rod		/	Galvanized steel		M12	UNI 7474	4
130-2	Screw for coupling guard		A2-70 UNI 7323			M5X6	UNI 7687	4
130-4	Set-screw		Carbon steel			M8X8	UNI 5929	[1]
131-1	Pin for shaft		Carbon steel					1
135-1	Washer		Galvanized steel			13X24X2.5	UNI 6512	4
135-4	Washer (bearing)		Carbon steel					[1]
137-1	Impeller spacer		EN 1.4301(AISI 304)		EN 1.4401 (AISI 316)			1
140	Coupling	Other models	Brass OT 58 UNI 5705					1
		EVM 18 6 to 12	CF35 SMn PB10					
150	Spacer		Carbon steel					[1]
160	Base		/	Die cast Aluminium EN AB-AlSi11Cu2 (Fe)				1
162	Motor bracket		Cast iron EN-GJL-200 -EN 1561	Cast iron + EN 1.4301(AISI 304)	Cast iron + EN 1.4401 (AISI 316)			1
212	Plug		EN 1.4301(AISI 304)		EN 1.4401 (AISI 316)			1
212-1	Plug	EVM, EVML	EN 1.4301(AISI 304)		EN 1.4401 (AISI 316)			2
		EVMG						4
245	Coupling guard		EN 1.4301(AISI 304)					2
273	Washer (plug)		EN 1.4301(AISI 304)		EN 1.4401 (AISI 316)			1
273-1	Washer (plug)	EVM, EVML	EN 1.4301(AISI 304)		EN 1.4401 (AISI 316)			2
		EVMG						4
274-1	C-type snap ring (mechanical seal)		EN 1.4301(AISI 304)		EN 1.4401 (AISI 316)			1
274-2	C-type snap ring (coupling)	EVM18 3 to 5	Carbon steel TC 80			D 50	UNI 7435	[1]
		EVM18 6 to 12				D 65		
274-3	C-type snap ring (bracket)	EVM18 3 to 5	Carbon steel TC 80			D 110	UNI 7437	[1]

[1] See table on page 353

SECTIONAL VIEW TABLE
EVM(.) 32

N°	PART NAME	MATERIAL			DIMENSIONS	STANDARD	Q.TY
		EVMG	EVM	EVML			
005-1	Suction casing	EN 1.4301 (AISI 304)		EN 1.4401 (AISI 316)			1
005-2	Intermediate Casing	EN 1.4301 (AISI 304)		EN 1.4401 (AISI 316)			[1]
005-3	Intermediate casing bearing	EN 1.4301 (AISI 304)		EN 1.4401 (AISI 316)			[1]
005-4	Discharge casing	EN 1.4301 (AISI 304)		EN 1.4401 (AISI 316)			1
006	Bottom casing	Cast Iron EN GJL-250-EN1561	EN 1.4308 (ASTM CF8)	EN 1.4408 (ASTM CF8M)			1
007	Outer casing	EN 1.4301 (AISI 304)		EN 1.4401 (AISI 316)			1
011	Casing cover	Cast Iron EN GJL-250-EN1561	Cast iron+ EN 1.4301 (AISI 304)	Cast iron + EN 1.4401 (AISI 316)			[1]
021	Impeller	EN 1.4301 (AISI 304)		EN 1.4401 (AISI 316)			[1]
021-1	Reduced impeller						[1]
031	Shaft	EN 1.4401 (AISI 316)					1
039-1	Key	Carbon Steel			12X8X90	UNI 6604	[1]
043-1	Shaft sleeve (mechanical seal)	EN 1.4301 (AISI 304)		EN 1.4401 (AISI 316)			1
043-2	Shaft sleeve (intermediate)	EN 1.4301 (AISI 304)		EN 1.4401 (AISI 316)			[1]
043-3	Shaft sleeve (bearing)	EN 1.4301 (AISI 304)		EN 1.4401 (AISI 316)			[1]
043-4	Shaft sleeve (adjustment)	EN 1.4301 (AISI 304)		EN 1.4401 (AISI 316)			[1]
043-5	Shaft sleeve (last stage)	EN 1.4301 (AISI 304)		EN 1.4401 (AISI 316)			1
044-1	Shaft sleeve bearing	Tungsten carbide					[1]
045	Flange holder	EN 1.402 (AISI 420)					4
047	Ring Holder	EN 1.4301 (AISI 304)		EN 1.4401 (AISI 316)			1
048	Impeller nut	A2-70 UNI 7323 with inox insert		A4-70 UNI 7323 with inox insert	M16		1
051	Motor adapter	Cast iron EN-GJL-200-EN 1561					[1]
052-1	Bearing	Tungsten carbide					[1]
056	Ball bearing	See table page 329					[1]
070-1	Ring for bearing	EN 1.4301 (AISI 304)					[1]
075	O-Ring (plug)	EPDM		FPM			1
075-1	O-Ring (plug)	EPDM		FPM			4
107	Liner ring	PTFE / EN 1.4301 (AISI 304)		PTFE / EN 1.4401 (AISI 316)			[1]
111-1	Mechanical seal	Silicon carbide / Carbon / FPM					1
111-2	Mechanical seal cartridge	EN 1.4301 (AISI 304)		EN 1.4401 (AISI 316)			1
111-3	Mechanical seal seat	EN 1.4301 (AISI 304)		EN 1.4401 (AISI 316)			1
111-4	Seal holder	Brass OT 58 UNI 5705		EN 1.4401 (AISI 316)			1
111-5	Adjusting ring	EN 1.4301 (AISI 304)		EN 1.4401 (AISI 316)			[1]
115-1	O-Ring (outer casing)	EPDM		FPM	D.208.91 X5.34		2
115-4	O-Ring (cartridge sleeve)	EPDM		FPM	D. 24.99X3.53		1
115-5	O-Ring (seal cover)	EPDM		FPM	D.44.04X3.53		1
120-1	Tie-rod	Galvanized steel 6.8 strenght class ISO 898/1					4
120-3	Screw (mechanical seal)	A2-70 UNI 7323			M5X10	UNI 5731	4
120-4	Screw (casing cover)	Galvanized steel 8.8 strenght class ISO 898/1			M10X25	UNI 5793	[1]

[1] See table on page 354

SECTIONAL VIEW TABLE
EVM(.) 32

N°	PART NAME		MATERIAL EVMG	MATERIAL EVM	MATERIAL EVML	DIMENSIONS	STANDARD	Q.TY
120-5	Screw for coupling	EVM32 1	Galvanized steel 8.8 strenght class ISO 898/1			M8X20	UNI 5931	[1]
		EVM32 3 to 10				M10X30	UNI 5739	
120-6	Screw for coupling	EVM32 1 to 3-3	Galvanized steel 8.8 strenght class ISO 898/1			M8X20	UNI 5931	2
		EVM32 3-0 to 10-3				M12X30	UNI 5931	
120-7	Screw (bearing)		Galvanized steel 8.8 strenght class ISO 898/1			M6X10	UNI 5739	[1]
120-8	Screw (bearing housing)	EVM32 3-0 to 10-3	Galvanized steel 8.8 strenght class ISO 898/1			M10X30	UNI 5739	[1]
		EVM32 2-0 to 3-3				M12X25	UNI 5739	
120-10	Screw (base plate)		Galvanized steel 8.8 strenght class ISO 898/1			M12X40	UNI 5739	4
120-13	Screw for motor	EVM32 1	Galvanized steel 8.8 strenght class ISO 898/1			M8X20	UNI 5739	4
		EVM32 2-0 to 3-3				M12X30	UNI 5739	
		EVM32 3-0 to 10-3				M16X65	UNI 5739	
128-1	Nut for tie rod		Galvanized steel			M 16	UNI 5588	4
128-3	Nut (motor)		Galvanized steel			M16	UNI 5588	[1]
129	Lock nut		Carbon Steel					[1]
130-1	Set screw		A2-70 UNI 7323			M6X8	UNI 5923	3
130-2	Screw for coupling guard		A2-70 UNI 7323			M5X6	UNI 7687	4
130-3	Set screw (mechanical seal)		A2-70 UNI 7323			M6X6	UNI 5923	1
130-4	Set screw (coupling pin)		Carbon steel			M 10X10	UNI 5923	1
131-1	Pin for shaft		Carbon Steel					1
135-1	Washer (Tie rod)		Galvanized steel			17X30X3	UNI 6592	4
135-3	Washer (coupling)		Galvanized steel			10.5X17.5X2.2	UNI 1751	[1]
135-4	Washer (bearing)		Carbon steel			6,4	UNI 1751	[1]
136	Locking washer (coupling)		Carbon steel					[1]
137-1	Impeller spacer		EN 1.4301 (AISI 304)		EN 1.4401 (AISI 316)			1
140	Coupling		Brass OT 58 UNI 5705					[1]
140-1	Coupling (motor side)		Carbon steel					[1]
140-2	Coupling (pump side)		Carbon steel					[1]
150	Spacer		carbon steel					[1]
160	Base		Cast iron EN-GJL-200-EN 1561					1
162	Motor bracket		Cast iron EN-GJL-200-EN 1561					1
212	Plug		EN 1.4301 (AISI 304)		EN 1.4401 (AISI 316)			1
212-1	Plug		EN 1.4301 (AISI 304)		EN 1.4401 (AISI 316)			4
245	Coupling guard		EN 1.4301 (AISI 304)					2
273	Plug Washer		EN 1.4301 (AISI 304)		EN 1.4401 (AISI 316)			1
273-1	Plug Washer		EN 1.4301 (AISI 304)		EN 1.4401 (AISI 316)			4
274-1	C-type snap ring (mechanical seal)		EN 1.4301 (AISI 304)		EN 1.4401 (AISI 316)	Diam. 26	UNI 7435	1
274-2	C-type snap ring (coupling)		Carbon Steel TC 80					[1]
274-3	C-type snap ring (bracket)		Carbon Steel TC 80					[1]
613	Flange		Carbon steel					2

[1] See table on page 354

SECTIONAL VIEW TABLE
EVM(.) 45

N°	PART NAME	MATERIAL			DIMENSIONS	STANDARD	Q.TY
		EVMG	EVM	EVML			
005-2	Intermediate casing	EN 1.4301 (AISI 304)		EN 1.4401 (AISI 316)			[1]
005-4	Discharge casing	EN 1.4301 (AISI 304)		EN 1.4401 (AISI 316)			1
006	Bottom casing	Cast iron EN GJL 250 EN 1561	EN. 1.4308 (ASTM CF8)	EN. 1.4408 (ASTM CF8M)			1
007	Outer casing	EN 1.4301 (AISI 304)		EN 1.4401 (AISI 316)			1
011	Casing cover	Cast iron EN GJL 250 EN 1561	Cast iron + EN 1.4301 (AISI 304)	Cast iron + EN 1.4401 (AISI 316)			[1]
012	Suction cover	EN. 1.1301 (AISI304)		EN 1.4401 (AISI 316)			1
021	Impeller	EN 1.4301 (AISI 304)		EN 1.4401 (AISI 316)			[1]
021-1	Reduced impeller						
031	Shaft	EN 1.4401 (AISI 316)					1
039-1	Key	Carbon steel			12X8X90	UNI 6604	[1]
043-1	Shaft sleeve (mechanical seal)	EN 1.4301 (AISI 304)		EN 1.4401 (AISI 316)			1
043-2	Shaft sleeve (intermediate)	EN 1.4301 (AISI 304)		EN 1.4401 (AISI 316)			[1]
043-3	Shaft sleeve (bearing)	EN 1.4301 (AISI 304)		EN 1.4401 (AISI 316)			[1]
043-4	Shaft sleeve (adjustment)	EN 1.4301 (AISI 304)		EN 1.4401 (AISI 316)			[1]
043-5	Shaft sleeve (last stage)	EN 1.4301 (AISI 304)		EN 1.4401 (AISI 316)			1
043-6	Shaft sleeve (adjustment)	EN 1.4301 (AISI 304)		EN 1.4401 (AISI 316)			1
043-7	Shaft sleeve	EN 1.4301 (AISI 304)		EN 1.4401 (AISI 316)			1
043-8	Shaft sleeve (discharge-lower)	EN 1.4301 (AISI 304)		EN 1.4401 (AISI 316)			1
044-1	Shaft sleeve bearing	Tungsten carbide					[1]
044-2	Bearing sleeve (bottom bearing)	Tungsten carbide					1
045	Flange holder	EN 1.402 (AISI 420)					4
047	Ring holder	EN 1.4301 (AISI 304)		EN 1.4401 (AISI 316)			1
048	Impeller nut	A2-70 UNI 7323 with inox insert		A4-70 UNI 7323 with inox insert	M16		1
051	Motor adapter	Cast iron EN-GJL-200-EN 1561					1
052-1	Bearing	Tungsten carbide					[1]
052-2	Bearing	Tungsten carbide					1
053	Bush holder	EN 1.4301 (AISI 304)		EN 1.4401 (AISI 316)			[1]
056	Ball bearing	see table page 357					1
070-1	Ring for bearing	EN 1.4301 (AISI 304)					[1]
070-2	Ring for bearing	EN 1.4301 (AISI 304)		EN 1.4401 (AISI 316)			1
075	O-Ring (plug)	EPDM		FPM			1
075-1	O-Ring (plug)	EPDM		FPM			4
081	Bush	PTFE					[1]
107	Liner ring	PTFE /EN 1.4401 (AISI316)					[1]
111-1	Mechanical seal	Silicon carbide /Carbon/FPM					1
111-2	Mechanical seal cartridge	EN 1.4301 (AISI 304)		EN 1.4401 (AISI 316)			1
111-3	Mechanical seal seat	EN 1.4301 (AISI 304)		EN 1.4401 (AISI 316)			1
111-4	Seal holder	Brass OT 58 UNI 5705		EN 1.4401 (AISI 316)			1
111-5	Adjusting ring	EN 1.4301 (AISI 304)		EN 1.4401 (AISI 316)			1
115-1	O-Ring (outer casing)	EPDM		FPM	D.240,66X5,34		2
115-4	O-Ring (cartridege sleeve)	EPDM		FPM	D.24,99X3,53		1
115-5	O-Ring (seal cover)	EPDM		FPM	D.44,04X3,53		1
120-1	Tie Rod	Galvanized steel 6.8 strenght class ISO 898/1					4
120-2	Tie Rod	EN 1.4301 (AISI 304)		EN 1.4401 (AISI 316)			2
120-3	Screw	A2-70 UNI 7323			M5X10	UNI 5931	4
120-4	Screw	Galvanized steel 8.8 strenght class ISO 898/1			M10X25	UNI 5739	[1]

[1] See table on page 355

SECTIONAL VIEW TABLE
EVM(.) 45

N°	PART NAME		MATERIAL EVMG	MATERIAL EVM	MATERIAL EVML	DIMENSIONS	STANDARD	Q.TY
120-5	Screw for coupling		Galvanized steel 8.8 strenght class ISO 898/1			M10X30	UNI 5739	[1]
120-6	Screw for coupling	EVM 45 1	Galvanized steel 8.8 strenght class ISO 898/1			M8X20	UNI 5931	2
		EVM 45 2 to 6				M12X30	UNI 5931	
120-7	Screw		Galvanized steel 8.8 strenght class ISO 898/1			M6X10	UNI 5739	[1]
120-8	Screw	EVM 45 1	Galvanized steel 8.8 strenght class ISO 898/1			M12X25	UNI 5739	4
		EVM 45 2 to 6				M10X30	UNI 5739	
120-9	Screw	EVML	EN 1.4301 (AISI 304)		EN 1.4401 (AISI 316)	M5X8	UNI 5737	4
		EVM, EVMG					UNI 5739	
120-12	Screw		EN 1.4301 (AISI 304)		EN 1.4401 (AISI 316)	M6X20	UNI 5931	1
120-13	Screw for motor	EVM45 1-0, 1-1	Galvanized steel 8.8 strenght class ISO 898/1			M12X30	UNI 5739	4
		EVM45 6				M16X55	UNI 5737	
		EVM45 2 to 5-3				M16X65	UNI 5739	
128-1	Nut for tie rod		Galvanized steel			M16	UNI 5588	4
128-2	Nut		Carbon steel		EN 1.4401 (AISI 316)	M5	UNI 5588	4
128-3	Nut		Galvanized steel			M16	UNI 5588	[1]
129	Lock nut		Carbon steel			M75X2		[1]
130-1	Set screw		A2- 70 UNI 7323			M6X8	UNI 5923	3
130-2	Screw for coupling guard		A2-70 UNI 7323			M5X6	UNI 7687	4
130-3	Set screw		A2- 70 UNI 7323			M6X6	UNI 5923	1
130-4	Set screw		Carbon steel			M10X10	UNI 5923	1
131-1	Pin for shaft		Carbon steel					1
131-2	Elastic pin		-	Galvanized steel		6X25	UNI 6873	1
135-1	Washer		Galvanized steel			17X30X3	UNI 6592	4
135-3	Washer		Galvanized steel			10,5X17,5X2,2	UNI 1751	[1]
135-4	Washer		Plated carbon steel			6,4	UNI 1751	[1]
135-5	Washer		EN 1.4301 (AISI 304)		EN 1.4401 (AISI 316)			1
136	Bearing washer		Carbon steel					[1]
136-1	Stopper ring		EN 1.4301 (AISI 304)		EN 1.4401 (AISI 316)			1
137-1	Impeller spacer		EN 1.4301 (AISI 304)		EN 1.4401 (AISI 316)			1
137-2	Shaft spacer		EN 1.4301 (AISI 304)		EN 1.4401 (AISI 316)			1
140	Coupling		Brass OT 58 UNI 5705					[1]
140-1	Motor coupling		Carbon steel					[1]
140-2	Coupling (pump side)		Carbon steel					[1]
150	Spacer		Carbon steel					[1]
160	Base		-	Cast iron EN-GJL-200 EN1561				1
162	Mator bracket		Cast iron EN-GJL-200 EN1561					1
212	Plug		EN 1.4301 (AISI 304)		EN 1.4401 (AISI 316)			1
212-1	Plug		EN 1.4301 (AISI 304)		EN 1.4401 (AISI 316)			4
245	Coupling guard		EN 1.4301 (AISI 304)					2
273	Plug washer		EN 1.4301 (AISI 304)		EN 1.4401 (AISI 316)			1
273-1	Plug washer		EN 1.4301 (AISI 304)		EN 1.4401 (AISI 316)			4
274-1	C-type snap ring		EN 1.4301 (AISI 304)		EN 1.4401 (AISI 316)	D.26	UNI 7435	1
274-2	C-Typr snap ring	EVM45 1-0, 1-1	Carbon steel TC80			D.50	UNI 7435	[1]
		EVM45 2 to 4-3				D.65	UNI 7435	
		EVM45 4-2				D.75	UNI 7535	
274-3	C-Typr snap ring		Carbon steel TC80			D.110	UNI 7437	[1]
613	Flange		Carbon steel					2

[1] See table on page 355

SECTIONAL VIEW TABLE
EVM(.) 64

N°	PART NAME	MATERIAL			DIMENSIONS	STANDARD	Q.TY
		EVMG	EVM	EVML			
005-2	Intermediate casing	EN 1.4301 (AISI 304)		EN 1.4401 (AISI 316)			[1]
005-4	Discharge casing	EN 1.4301 (AISI 304)		EN 1.4401 (AISI 316)			1
006	Bottom casing	Cast iron EN GJL-250- EN 1561	EN 1.4301 (AISI 304)	EN 1.4401 (AISI 316)			1
007	Outer casing	EN 1.4301 (AISI 304)		EN 1.4401 (AISI 316)			1
011	Casing cover	Cast iron EN GJL-250- EN 1561	Cast iron + EN 1.4301 (AISI 304)	Cast iron + EN 1.4401 (AISI 316)			[1]
012	Suction cover	EN 1.4301 (AISI 304)		EN 1.4401 (AISI 316)			1
021	Impeller	EN 1.4301 (AISI 304)		EN 1.4401 (AISI 316)			[1]
021-1	Reduced impeller						
031	Shaft	EN 1.4401 (AISI 316)					1
039-1	Key	Carbon steel			12X8X90	UNI 6604	[1]
043-1	Shaft sleeve (mechanical seal)	EN 1.4301 (AISI 304)		EN 1.4401 (AISI 316)			1
043-2	Shaft sleeve (intermediate)	EN 1.4301 (AISI 304)		EN 1.4401 (AISI 316)			[1]
043-3	Shaft sleeve (bearing)	EN 1.4301 (AISI 304)		EN 1.4401 (AISI 316)			[1]
043-4	Shaft sleeve (adjustment)	EN 1.4301 (AISI 304)		EN 1.4401 (AISI 316)			[1]
043-5	Shaft sleeve (last stage)	EN 1.4301 (AISI 304)		EN 1.4401 (AISI 316)			1
043-6	Shaft sleeve (adjustment)	EN 1.4301 (AISI 304)		EN 1.4401 (AISI 316)			1
043-7	Shaft sleeve (bottom bearing)	EN 1.4301 (AISI 304)		EN 1.4401 (AISI 316)			1
043-8	Shaft sleeve (discharge/lower)	EN 1.4301 (AISI 304)		EN 1.4401 (AISI 316)			1
044-1	Shaft sleeve bearing	Tungsten carbide					[1]
044-2	Bearing sleeve	Tungsten carbide					1
045	Flange holder	EN 1.402 (AISI 420)					4
047	Ring holder	EN 1.4301 (AISI 304)		EN 1.4401 (AISI 316)			1
048	Impeller nut	A2-70 UNI 7323 with inox insert		A4-70 UNI 7323 with inox insert	M16		1
051	Motor adapter	Cast iron EN-GJL-200-EN 1561					1
052-1	Bearing	Tungsten carbide					[1]
052-2	Bearing	Tungsten carbide					1
053	Bush holder	EN 1.4301 (AISI 304)		EN 1.4401 (AISI 316)			[1]
056	Ball bearing	See table page 329					1
070-1	Ring for bearing	EN 1.4301 (AISI 304)					[1]
070-2	Ring for bearing	EN 1.4301 (AISI 304)		EN 1.4401 (AISI 316)			1
075	O-Ring (plug)	EPDM		FPM			1
075-1	O-Ring (plug)	EPDM		FPM			4
081	Bush	PTFE					[1]
107	Liner ring	PTFE / EN 1.4401 (AISI 316)					[1]
111-1	Mechanical seal	Silicon carbide / Carbon /FPM					1
111-2	Mechanical seal cartridge	EN 1.4301 (AISI 304)		EN 1.4401 (AISI 316)			1
111-3	Mechanical seal seat	EN 1.4301 (AISI 304)		EN 1.4401 (AISI 316)			1
111-4	Seal holder	Brass OT 58 UNI 5705		EN 1.4401 (AISI 316)			1
111-5	Adjusting ring	EN 1.4301 (AISI 304)		EN 1.4401 (AISI 316)			1
115-1	O-Ring (outer casing)	EPDM		FPM	D.240,66X5,34		2
115-4	O-Ring (cartridge sleeve)	EPDM		FPM	D.24,99X3,53		1
115-5	O-Ring (seal cover)	EPDM		FPM	D.44,04X3,53		1
120-1	Tie-rod	Galvanized steel 6.8 Strenght class ISO 898/1					4
120-2	Tie-rod	EN 1.4301 (AISI 304)		EN 1.4401 (AISI 316)			1
120-3	Screw (mechanical seal)	A2-70 UNI 7323			M5X10	UNI 5931	4
120-4	Screw (casing cover)	Galvanized steel 8.8 Strenght class ISO 898/1			M10X25	UNI 5739	[1]

[1] See table on page 356

SECTIONAL VIEW TABLE
EVM(.) 64

N°	PART NAME		MATERIAL EVMG	MATERIAL EVM	MATERIAL EVML	DIMENSIONS	STANDARD	Q.TY
120-5	Screw for coupling		Galvanized steel 8.8 Strenght class ISO 898/1			M10X30	UNI 5739	[1]
120-6	Screw for coupling	EVM64 1-1	Galvanized steel 8.8 Strenght class ISO 898/1			M 8X20	UNI 5931	2
		EVM64 1-0 and higher				M12X30	UNI 5931	
120-7	Screw		Galvanized steel			M 6X10	UNI 5739	[1]
120-8	Screw	EVM 64 1-0 to 4-3	Galvanized steel 8.8 Strenght class ISO 898/1			M10X30	UNI 5739	4
		EVM64 1-1				M12X35	UNI 5739	
120-9	Screw	EVML	EN 1.4301 (AISI 304)		EN 1.4401 (AISI 316)	M5X8	UNI 5737	4
		EVM, EVMG				M5X8	UNI 5739	
120-12	Screw		EN 1.4301 (AISI 304)		EN 1.4401 (AISI 316)	M 6X20	UNI 5931	1
120-13	Screw	EVM 64 1-1	Galvanized steel 8.8 Strenght class ISO 898/1			M12X30	UNI 5739	4
		EVM 64 4-1, 4-2				M16X55	UNI 5737	
		EVM 64 1-0 to 4-3				M16X65	UNI 5739	
128-1	Nut for tie rod		Galvanized steel			M16	UNI 5588	4
128-2	Nut		Carbon steel		EN 1.4401 (AISI 316)	M5	UNI 5588	4
128-3	Nut		Galvanized steel			M16	UNI 5588	[1]
129	Lock nut		Carbon steel					[1]
130-1	Set screw		A2-70 UNI 7323			M6X8	UNI 5923	3
130-2	Screw for coupling guard		A2-70 UNI 7323			M5X6	UNI 7687	4
130-3	Set screw		EN 1.4301 (AISI 304)		EN 1.4401 (AISI 316)	M6X6	UNI 5923	1
130-4	Set screw		Galvanized steel			M10X10	UNI 5923	1
131-1	Pin for shaft		Carbon steel					1
131-2	Elastic pin		-	Galvanized steel		6X25	UNI 6873	1
135-1	Washer		Galvanized steel			17x30x3	UNI 6592	4
135-3	Washer		Galvanized steel			10,5X17,5X2,2	UNI 1751	[1]
135-4	Washer		Plated carbon steel			6,4	UNI 1751	[1]
135-5	Washer		EN 1.4301 (AISI 304)		EN 1.4401 (AISI 316)	D.6		1
136	Bearing washer		Carbon steel					[1]
136-1	Stopper ring		EN 1.4301 (AISI 304)		EN 1.4401 (AISI 316)			1
137-1	Impeller spacer		EN 1.4301 (AISI 304)		EN 1.4401 (AISI 316)			1
137-2	Shaft spacer		EN 1.4301 (AISI 304)		EN 1.4401 (AISI 316)			1
140	Coupling		Brass OT 58 UNI 5705					[1]
140-1	Motor coupling		Carbon steel					[1]
140-2	Coupling (pump side)		Carbon steel					[1]
150	Spacer		Carbon steel					[1]
160	Base		-	Cast iron EN-GJL-200 EN 1561				1
162	Motor bracket		Cast iron EN-GJL-200-EN 1561					1
212	Plug		EN 1.4301 (AISI 304)		EN 1.4401 (AISI 316)			1
212-1	Plug		EN 1.4301 (AISI 304)		EN 1.4401 (AISI 316)			4
245	Coupling guard		EN 1.4301 (AISI 304)					2
273	Plug washer		EN 1.4301 (AISI 304)		EN 1.4401 (AISI 316)			1
273-1	Plug washer		EN 1.4301 (AISI 304)		EN 1.4401 (AISI 316)			4
274-1	C-Type snap ring		EN 1.4301 (AISI 304)		EN 1.4401 (AISI 316)	D.26	UNI 7435	1
274-2	C-Type snap ring	EVM64 1-1	Carbon steel TC80			D.50	UNI 7435	[1]
		EVM64 1-0 to 2-2				D.65	UNI 7435	
		EVM64 2-0, 3-3				D.75	UNI 7535	
274-3	C-Type snap ring		Carbon steel TC80			D.110	UNI 7437	[1]
613	Flange		Carbon steel					2

[1] See table on page 356

QUANTITY FOR MODEL
EVM(.) 3-5

Pump Type EVM(.)	Quantity for model																										
	005-2	005-3	021	043-2	043-3	043-5	043-6	044-1	046	051	052-1	056	Bearing type	107	115-3	117	120-5	120-6	120-8	120-11	128-6	130-4	135-6	150	219	274-2	274-3
3 2N6/0.37	/	1	2	/	1	/	/	1	1	/	1	/	/	2	2	2	4	/	/	4	4	/	4	/	2	/	/
3 3N6/0.55	1	1	3	1	1	/	/	1	1	/	1	/	/	3	2	2	4	/	/	4	4	/	4	/	2	/	/
3 4N6/0.75	2	1	4	2	1	/	/	1	1	/	1	/	/	4	2	2	4	/	/	4	4	/	4	/	2	/	/
3 5N6/1.1	3	1	5	3	1	/	/	1	1	/	1	/	/	5	2	2	4	/	/	4	4	/	4	/	2	/	/
3 6N6/1.1	4	1	6	4	1	/	/	1	1	/	1	/	/	6	2	2	4	/	/	4	4	/	4	/	2	/	/
3 7N6/1.5	5	1	7	5	1	/	/	1	1	/	1	/	/	7	2	2	4	/	/	4	4	/	4	/	2	/	/
3 8N6/1.5	6	1	8	6	1	/	/	1	1	/	1	/	/	8	2	2	4	/	/	4	4	/	4	/	2	/	/
3 9N6/2.2	7	1	9	7	1	/	/	1	1	/	1	/	/	9	2	2	4	/	/	4	4	/	4	/	2	/	/
3 11F6/2.2	9	1	11	9	1	/	/	1	1	/	1	/	/	11	/	/	4	/	/	/	4	/	4	/	/	/	/
3 12F6/2.2	10	1	12	10	1	/	/	1	1	/	1	/	/	12	/	/	4	/	/	/	4	/	4	/	/	/	/
3 13F6/3.0	10	2	13	10	2	/	/	2	1	1	2	1	6308 ZZ	13	/	/	/	2	/	/	/	1	/	1	/	1	1
3 15F6/3.0	12	2	15	12	2	/	/	2	1	1	2	1	6308 ZZ	15	/	/	/	2	/	/	/	1	/	1	/	1	1
3 18F6/4.0	15	2	18	15	2	/	/	2	1	1	2	1	6308 ZZ	18	/	/	/	2	/	/	/	1	/	1	/	1	1
5 2N6/0.75	/	1	2	/	1	1	1	1	1	/	1	/	/	2	2	2	4	/	/	4	4	/	4	/	2	/	/
5 3N6/1.1	1	1	3	1	1	1	1	1	1	/	1	/	/	3	2	2	4	/	/	4	4	/	4	/	2	/	/
5 4N6/1.5	2	1	4	2	1	1	1	1	1	/	1	/	/	4	2	2	4	/	/	4	4	/	4	/	2	/	/
5 5N6/2.2	3	1	5	3	1	1	1	1	1	/	1	/	/	5	2	2	4	/	/	4	4	/	4	/	2	/	/
5 6N6/2.2	4	1	6	4	1	1	1	1	1	/	1	/	/	6	2	2	4	/	/	4	4	/	4	/	2	/	/
5 7N6/3.0	5	1	7	5	1	1	1	1	1	1	1	1	6308 ZZ	7	2	2	/	2	/	4	/	1	/	1	2	1	1
5 8N6/3.0	6	1	8	6	1	1	1	1	1	1	1	1	6308 ZZ	8	2	2	/	2	/	4	/	1	/	1	2	1	1
5 10N6/4.0	8	1	10	8	1	1	1	1	1	1	1	1	6308 ZZ	10	2	2	/	2	/	4	/	1	/	1	2	1	1
5 11F6/4.0	8	2	11	8	2	1	1	2	1	1	2	1	6308 ZZ	11	/	/	/	2	/	/	/	1	/	1	/	1	1
5 12F6/4.0	9	2	12	9	2	1	1	2	1	1	2	1	6308 ZZ	12	/	/	/	2	/	/	/	1	/	1	/	1	1
5 14F6/5.5	11	2	14	11	2	1	1	2	1	1	2	1	6310 ZZ	14	/	/	/	2	4	/	/	1	/	1	/	1	1
5 16F6/5.5	13	2	16	13	2	1	1	2	1	1	2	1	6310 ZZ	16	/	/	/	2	4	/	/	1	/	1	/	1	1
5 19F6/7.5	16	2	19	16	2	1	1	2	1	1	2	1	6310 ZZ	19	/	/	/	2	4	/	/	1	/	1	/	1	1

QUANTITY FOR MODEL
EVM(.) 10-18

Pump Type EVM(.)	Quantity for model																												
	005-2	005-3	021	043-2	043-3	043-5	044-1	051	052-1	056	Bearing type	070-1	107	115-3	117	120-5	120-6	120-7	120-8	120-11	128-3	128-6	130-4	135-4	135-6	150	219	274-2	274-3
10 2N6/1.5	/	1	2	/	1	1	1	/	1	/	/	/	2	2	2	4	/	/	/	4	/	4	/	/	4	/	2	/	/
10 3N6/2.2	1	1	3	1	1	1	1	/	1	/	/	/	3	2	2	4	/	/	/	4	/	4	/	/	4	/	2	/	/
10 4N6/3.0	2	1	4	2	1	1	1	1	1	1	6308 ZZ	/	4	2	2	/	2	/	/	4	/	/	1	/	/	1	2	1	1
10 5N6/4.0	3	1	5	3	1	1	1	1	1	1	6308 ZZ	/	5	2	2	/	2	/	/	4	/	/	1	/	/	1	2	1	1
10 6N6/4.0	4	1	6	4	1	1	1	1	1	1	6308 ZZ	/	6	2	2	/	2	/	/	4	/	/	1	/	/	1	2	1	1
10 8N6/5.5	6	1	8	6	1	1	1	1	1	1	6310 ZZ	/	8	2	2	/	2	/	4	4	/	/	1	/	/	1	2	1	1
10 10F6/7.5	8	1	10	8	1	1	1	1	1	1	6310 ZZ	/	10	/	/	/	2	/	4	/	/	/	1	/	/	1	/	1	1
10 11F6/7.5	9	1	11	9	1	1	1	1	1	1	6310 ZZ	/	11	/	/	/	2	/	4	/	/	/	1	/	/	1	/	1	1
10 12F6/7.5	9	2	12	9	2	1	2	1	2	1	6310 ZZ	/	12	/	/	/	2	/	4	/	/	/	1	/	/	1	/	1	1
10 14F6/11	11	2	14	11	2	1	2	1	2	1	6313 ZZ	1	14	/	/	/	2	3	4	/	4	/	1	3	/	1	/	1	/
10 16F6/11	13	2	16	13	2	1	2	1	2	1	6313 ZZ	1	16	/	/	/	2	3	4	/	4	/	1	3	/	1	/	1	/
18 1F6/2.2	/	1	1	/	1	1	1	/	1	/	/	/	1	/	/	2	2	/	/	/	/	/	1	/	/	/	/	/	/
18 2F6/3.0	/	1	2	/	1	1	1	/	1	/	/	/	2	/	/	2	2	/	/	/	/	/	1	/	/	/	/	/	/
18 3F6/5.5	1	1	3	1	1	1	1	1	1	1	6310 ZZ	/	3	/	/	/	2	/	4	/	/	/	1	/	/	1	/	1	1
18 4F6/7.5	2	1	4	2	1	1	1	1	1	1	6310 ZZ	/	4	/	/	/	2	/	4	/	/	/	1	/	/	1	/	1	1
18 5F6/7.5	3	1	5	3	1	1	1	1	1	1	6310 ZZ	/	5	/	/	/	2	/	4	/	/	/	1	/	/	1	/	1	1
18 6F6/11	4	1	6	4	1	1	1	1	1	1	6313 ZZ	1	6	/	/	/	2	3	4	/	4	/	1	3	/	1	/	1	/
18 7F6/11	5	1	7	5	1	1	1	1	1	1	6313 ZZ	1	7	/	/	/	2	3	4	/	4	/	1	3	/	1	/	1	/
18 8F6/15	6	1	8	6	1	1	1	1	1	1	6313 ZZ	1	8	/	/	/	2	3	4	/	4	/	1	3	/	1	/	1	/
18 10F6/15	7	2	10	7	2	1	2	1	2	1	6313 ZZ	1	10	/	/	/	2	3	4	/	4	/	1	3	/	1	/	1	/
18 11F6/18.5	8	2	11	8	2	1	2	1	2	1	6313 ZZ	1	11	/	/	/	2	3	4	/	4	/	1	3	/	1	/	1	/
18 12F6/18.5	9	2	12	9	2	1	2	1	2	1	6313 ZZ	1	12	/	/	/	2	3	4	/	4	/	1	3	/	1	/	1	/

CONSTRUCTION

60Hz

Rev. G

QUANTITY FOR MODEL
EVM(.) 32

Pump Type EVM (.)	Quantity for model																															
	005-2	005-3	011	021	021-1	039-1	043-2	043-3	043-4	044-1	051	052-1	056	070-1	107	111-5	120-4	120-5	120-7	120-8	128-3	129	135-3	135-4	136	140	140-1	140-2	150	274-2	274-3
32 1-0F6/4.0	/	1	/	1	/	/	/	1	1	1	/	1	/	/	1	1	/	2	/	/	/	/	/	/	/	1	/	/	/	/	/
32 2-2F6/5.5	/	1	/	/	2	/	/	1	1	1	1	1	1	/	2	1	/	/	/	4	/	/	/	/	/	1	/	/	1	1	1
32 2-0F6/7.5	/	1	/	2	/	/	/	1	1	1	1	1	1	/	2	1	/	/	/	4	/	/	/	/	/	1	/	/	1	1	1
32 3-3F6/7.5	1	1	/	/	3	/	1	1	1	1	1	1	1	/	3	1	/	/	/	4	/	/	/	/	/	1	/	/	1	1	1
32 3-0F6/11	1	1	1	3	/	1	1	1	1	1	1	1	1	1	3	1	4	4	3	4	4	/	4	3	/	/	1	1	1	1	/
32 4-3F6/11	2	1	1	1	3	1	2	1	1	1	1	1	1	1	4	1	4	4	3	4	4	/	4	3	/	/	1	1	1	1	/
32 4-0F6/15	2	1	1	4	/	1	2	1	1	1	1	1	1	1	4	1	4	4	3	4	4	/	4	3	/	/	1	1	1	1	/
32 5-3F6/15	3	1	1	2	3	1	3	1	1	1	1	1	1	1	5	1	4	4	3	4	4	/	4	3	/	/	1	1	1	1	/
32 5-2F6/15	3	1	1	3	2	1	3	1	1	1	1	1	1	1	5	1	4	4	3	4	4	/	4	3	/	/	1	1	1	1	/
32 5-0F6/18.5	3	1	1	5	/	1	3	1	1	1	1	1	1	1	5	1	4	4	3	4	4	/	4	3	/	/	1	1	1	1	/
32 6-3F6/18.5	4	1	1	3	3	1	4	1	1	1	1	1	1	1	6	1	4	4	3	4	4	/	4	3	/	/	1	1	1	1	/
32 6-0F6/22	4	1	1	5	1	1	4	1	1	1	1	1	1	1	6	1	4	4	3	4	4	/	4	3	/	/	1	1	1	1	/
32 7-3F6/22	5	1	1	4	3	1	5	1	1	1	1	1	1	1	7	1	4	4	3	4	4	/	4	3	/	/	1	1	1	1	/
32 7-2F6/22	5	1	1	5	2	1	5	1	1	1	1	1	1	1	7	1	4	4	3	4	4	/	4	3	/	/	1	1	1	1	/
32 7-0F6/30	5	1	1	7	/	1	5	1	1	1	1	1	1	1	7	1	4	4	3	4	4	1	4	3	1	/	1	1	/	/	/
32 8-3F6/30	6	1	1	5	3	1	6	1	1	1	1	1	1	1	8	1	4	4	3	4	4	1	4	3	1	/	1	1	/	/	/
32 8-0F6/30	6	1	1	8	/	1	6	1	1	1	1	1	1	1	8	/	4	4	3	4	4	1	4	3	1	/	1	1	/	/	/
32 9-3F6/30	7	1	1	6	3	1	7	1	1	1	1	1	1	1	9	/	4	4	3	4	4	1	4	3	1	/	1	1	/	/	/
32 9-0F6/30	7	1	1	9	/	1	7	1	1	1	1	1	1	1	9	/	4	4	3	4	4	1	4	3	1	/	1	1	/	/	/
32 10-4F6/30	7	2	1	6	4	1	7	2	2	2	1	2	1	1	10	/	4	4	3	4	4	1	4	3	1	/	1	1	/	/	/

QUANTITY FOR MODEL
EVM(.) 45

Pump Type EVM (.)	Quantity for model																											
	005-2	011	021	021-1	039-1	043-2	043-3	043-4	044-1	052-1	053	070-1	081	107	120-4	120-5	120-7	128-3	129	135-3	135-4	136	140	140-1	140-2	150	274-2	274-3
45 1-1F6/5.5	1	/	/	1	/	/	/	/	/	/	1	/	1	1	/	/	/	/	/	/	/	/	1	/	/	1	1	1
45 1-0F6/7.5	1	/	1	/	/	/	/	/	/	/	1	/	1	1	/	/	/	/	/	/	/	/	1	/	/	1	1	1
45 2-2F6/11	2	1	/	2	1	1	/	/	/	/	2	1	2	2	4	4	3	4	/	4	3	/	/	1	1	1	1	/
45 2-1F6/11	2	1	1	1	1	1	/	/	/	/	2	1	2	2	4	4	3	4	/	4	3	/	/	1	1	1	1	/
45 2-0F6/15	2	1	2	/	1	1	/	/	/	/	2	1	2	2	4	4	3	4	/	4	3	/	/	1	1	1	1	/
45 3-3F6/15	3	1	/	3	1	2	/	/	/	/	3	1	3	3	4	4	3	4	/	4	3	/	/	1	1	1	1	/
45 3-2F6/15	3	1	1	2	1	2	/	/	/	/	3	1	3	3	4	4	3	4	/	4	3	/	/	1	1	1	1	/
45 3-1F6/18.5	3	1	2	1	1	2	/	/	/	/	3	1	3	3	4	4	3	4	/	4	3	/	/	1	1	1	1	/
45 3-0F6/22	3	1	3	/	1	2	/	/	/	/	3	1	3	3	4	4	3	4	/	4	3	/	/	1	1	1	1	/
45 4-3F6/18.5	4	1	1	3	1	2	1	1	1	1	4	1	3	4	4	4	3	4	/	4	3	/	/	1	1	1	1	/
45 4-2F6/22	4	1	2	2	1	2	1	1	1	1	4	1	3	4	4	4	3	4	/	4	3	/	/	1	1	1	1	/
45 4-1F6/30	4	1	3	1	1	2	1	1	1	1	4	1	3	4	4	4	3	4	1	4	3	1	/	1	1	/	/	/
45 4-0F6/30	4	1	4	/	1	2	1	1	1	1	4	1	3	4	4	4	3	4	1	4	3	1	/	1	1	/	/	/
45 5-3F6/30	5	1	2	3	1	3	1	1	1	1	5	1	4	5	4	4	3	4	1	4	3	1	/	1	1	/	/	/
45 5-2F6/30	5	1	3	2	1	3	1	1	1	1	5	1	4	5	4	4	3	4	1	4	3	1	/	1	1	/	/	/
45 5-1F6/30	5	1	4	1	1	3	1	1	1	1	5	1	4	5	4	4	3	4	1	4	3	1	/	1	1	/	/	/
45 5-0F6/37	5	1	5	/	1	3	1	1	1	1	5	1	4	5	4	4	3	4	1	4	3	1	/	1	1	/	/	/
45 6-3F6/37	6	1	3	3	1	4	1	1	1	1	6	1	5	6	4	4	3	4	1	4	3	1	/	1	1	/	/	/
45 6-2F6/37	6	1	4	2	1	4	1	1	1	1	6	1	5	6	4	4	3	4	1	4	3	1	/	1	1	/	/	/
45 6-1F6/37	6	1	5	1	1	4	1	1	1	1	6	1	5	6	4	4	3	4	1	4	3	1	/	1	1	/	/	/

CONSTRUCTION

60Hz

Rev. G

QUANTITY FOR MODEL
EVM(.) 64

Pump Type EVM (.)	Quantity for model																											
	005-2	011	021	021-1	039-1	043-2	043-3	043-4	044-1	052-1	053	070-1	081	107	120-4	120-5	120-7	128-3	129	135-3	135-4	136	140	140-1	140-2	150	274-2	274-3
64 1-1F6/7.5	1	/	/	1	/	/	/	/	/	/	1	/	1	1	/	/	/	/	/	/	/	/	1	/	/	1	1	1
64 1-0 F6/11	1	1	1	/	1	/	/	/	/	/	1	1	1	1	4	4	3	4	/	4	3	/	/	1	1	1	1	/
64 2-2 F6/15	2	1	/	2	1	1	/	/	/	/	2	1	2	2	4	4	3	4	/	4	3	/	/	1	1	1	1	/
64 2-1F6/18.5	2	1	1	1	1	1	/	/	/	/	2	1	2	2	4	4	3	4	/	4	3	/	/	1	1	1	1	/
64 2-0 F6/22	2	1	2	/	1	1	/	/	/	/	2	1	2	2	4	4	3	4	/	4	3	/	/	1	1	1	1	/
64 3-3 F6/22	3	1	/	3	1	2	/	/	/	/	3	1	3	3	4	4	3	4	/	4	3	/	/	1	1	1	1	/
64 3-2 F6/30	3	1	1	2	1	2	/	/	/	/	3	1	3	3	4	4	3	4	1	4	3	1	/	1	1	/	/	/
64 3-1F6/30	3	1	2	1	1	2	/	/	/	/	3	1	3	3	4	4	3	4	1	4	3	1	/	1	1	/	/	/
64 3-0 F6/30	3	1	3	/	1	2	/	/	/	/	3	1	3	3	4	4	3	4	1	4	3	1	/	1	1	/	/	/
64 4-3 F6/30	4	1	1	3	1	2	1	1	1	1	4	1	3	4	4	4	3	4	1	4	3	1	/	1	1	/	/	/
64 4-2 F6/37	4	1	2	2	1	2	1	1	1	1	4	1	3	4	4	4	3	4	1	4	3	1	/	1	1	/	/	/
64 4-1F6/37	4	1	3	1	1	2	1	1	1	1	4	1	3	4	4	4	3	4	1	4	3	1	/	1	1	/	/	/

CONSTRUCTION

60Hz

Rev. G

BEARINGS

Pump Type	Ball bearing Motor	
	Pump side	Fan side
3 2N6/0.37	6202 ZZ	6202 ZZ
3 3N6/0.55	6202 ZZ	6202 ZZ
3 4N6/0.75	6204 ZZ	6204 ZZ
3 5N6/1.1	6204 ZZ	6204 ZZ
3 6N6/1.1	6204 ZZ	6204 ZZ
3 7N6/1.5	6205 ZZ	6205 ZZ
3 8N6/1.5	6205 ZZ	6205 ZZ
3 9N6/2.2	6205 ZZ	6205 ZZ
3 11F6/2.2	6205 ZZ	6205 ZZ
3 12F6/2.2	6205 ZZ	6205 ZZ
3 13F6/3.0	6206 ZZ	6206 ZZ
3 15F6/3.0	6206 ZZ	6206 ZZ
3 18F6/4.0	6206 ZZ	6206 ZZ
5 2N6/0.75	6204 ZZ	6204 ZZ
5 3N6/1.1	6204 ZZ	6204 ZZ
5 4N6/1.5	6205 ZZ	6205 ZZ
5 5N6/2.2	6205 ZZ	6205 ZZ
5 6N6/2.2	6205 ZZ	6205 ZZ
5 7N6/3.0	6206 ZZ	6206 ZZ
5 8N6/3.0	6206 ZZ	6206 ZZ
5 10N6/4.0	6206 ZZ	6206 ZZ
5 11F6/4.0	6206 ZZ	6206 ZZ
5 12F6/4.0	6206 ZZ	6206 ZZ
5 14F6/5.5	6208 ZZ	6208 ZZ
5 16F6/5.5	6208 ZZ	6208 ZZ
5 19F6/7.5	6208 ZZ	6208 ZZ
10 2N6/1.5	6205 ZZ	6205 ZZ
10 3N6/2.2	6205 ZZ	6205 ZZ
10 4N6/3.0	6206 ZZ	6205 ZZ
10 5N6/4.0	6206 ZZ	6205 ZZ
10 6N6/4.0	6206 ZZ	6205 ZZ
10 8N6/5.5	6208 ZZ	6208 ZZ
10 10F6/7.5	6208 ZZ	6208 ZZ
10 11F6/7.5	6208 ZZ	6208 ZZ
10 12F6/7.5	6208 ZZ	6208 ZZ
10 14F6/11	6209 ZZ	6209 ZZ
10 16F6/11	6209 ZZ	6209 ZZ
18 1F6/2.2	6205 ZZ	6205 ZZ
18 2F6/3.0	6206 ZZ	6206 ZZ
18 3F6/5.5	6208 ZZ	6208 ZZ
18 4F6/7.5	6208 ZZ	6208 ZZ
18 5F6/7.5	6208 ZZ	6208 ZZ
18 6F6/11	6209 ZZ	6209 ZZ
18 7F6/11	6209 ZZ	6209 ZZ
18 8F6/15	6209 ZZ	6209 ZZ
18 10F6/15	6209 ZZ	6209 ZZ
18 11F6/18.5	6209 ZZ	6209 ZZ
18 12 F6/18.5	6209 ZZ	6209 ZZ

Pump Type	Ball bearing		
	Pump	Motor	
		Pump side	Fan side
32 1-0 F6/4.0	/	6206-ZZ	6206-ZZ
32 2-2 F6/5.5	6310 ZZ C3	6208-ZZ	6208-ZZ
32 2-0 F6/7.5	6310 ZZ C3	6208-ZZ	6208-ZZ
32 3-3 F6/7.5	6310 ZZ C3	6208-ZZ	6208-ZZ
32 3-0 F6/11	6313 ZZ C3	6209-ZZ	6209-ZZ
32 4-3 F6/11	6313 ZZ C3	6209-ZZ	6209-ZZ
32 4-0 F6/15	6313 ZZ C3	6209-ZZ	6209-ZZ
32 5-3 F6/15	6313 ZZ C3	6209-ZZ	6209-ZZ
32 5-1 F6/15	6313 ZZ C3	6209-ZZ	6209-ZZ
32 5-0 F6/18.5	6313 ZZ C3	6209-ZZ	6209-ZZ
32 6-3 F6/18.5	6313 ZZ C3	6209-ZZ	6209-ZZ
32 6-1 F6/18.5	6313 ZZ C3	6209-ZZ	6209-ZZ
32 6-0 F6/22	6315 ZZ C3	6210-ZZ	6209-ZZ
32 7-3 F6/22	6315 ZZ C3	6210-ZZ	6209-ZZ
32 7-1 F6/22	6315 ZZ C3	6210-ZZ	6209-ZZ
32 7-0 F6/30	6315 ZZDT C3*	6210-ZZ	6210-ZZ
32 8-3 F6/30	6315 ZZDT C3*	6210-ZZ	6210-ZZ
32 8-0 F6/30	6315 ZZDT C3*	6210-ZZ	6210-ZZ
32 9-3 F6/30	6315 ZZDT C3*	6210-ZZ	6210-ZZ
32 9-0 F6/30	6315 ZZDT C3*	6210-ZZ	6210-ZZ
32 10-3 F6/30	6315 ZZDT C3*	6210-ZZ	6210-ZZ
45 1-1 F6/5.5	6310 ZZ C3	6208-ZZ	6208-ZZ
45 1-0 F6/7.5	6310 ZZ C3	6208-ZZ	6208-ZZ
45 2-2 F6/11	6313 ZZ C3	6209-ZZ	6209-ZZ
45 2-1 F6/11	6313 ZZ C3	6209-ZZ	6209-ZZ
45 2-0 F6/15	6313 ZZ C3	6209-ZZ	6209-ZZ
45 3-3 F6/15	6313 ZZ C3	6209-ZZ	6209-ZZ
45 3-2 F6/15	6313 ZZ C3	6209-ZZ	6209-ZZ
45 3-1 F6/18.5	6313 ZZ C3	6209-ZZ	6209-ZZ
45 3-0 F6/22	6313 ZZ C3	6210-ZZ	6209-ZZ
45 4-3 F6/18.5	6313 ZZ C3	6209-ZZ	6209-ZZ
45 4-2 F6/22	6315 ZZ C3	6210-ZZ	6209-ZZ
45 4-1 F6/30	6315 ZZDT C3*	6210-ZZ	6210-ZZ
45 4-0 F6/30	6315 ZZDT C3*	6210-ZZ	6210-ZZ
45 5-3 F6/30	6315 ZZDT C3*	6210-ZZ	6210-ZZ
45 5-2 F6/30	6315 ZZDT C3*	6210-ZZ	6210-ZZ
45 5-1 F6/30	6315 ZZDT C3*	6210-ZZ	6210-ZZ
45 5-0 F6/37	6315 ZZDT C3*	6212-ZZ	6212-ZZ
45 6-3 F6/37	6315 ZZDT C3*	6212-ZZ	6212-ZZ
45 6-2 F6/37	6315 ZZDT C3*	6212-ZZ	6212-ZZ
45 6-1 F6/37	6315 ZZDT C3*	6212-ZZ	6212-ZZ
64 1-1 F6/7.5	6310 ZZ C3	6208-ZZ	6208-ZZ
64 1-0 F6/11	6313 ZZ C3	6209-ZZ	6209-ZZ
64 2-2 F6/15	6313 ZZ C3	6209-ZZ	6209-ZZ
64 2-1 F6/18.5	6313 ZZ C3	6209-ZZ	6209-ZZ
64 2-0 F6/22	6315 ZZ C3	6210-ZZ	6209-ZZ
64 3-3 F6/22	6315 ZZ C3	6210-ZZ	6209-ZZ
64 3-2 F6/30	6315 ZZDT C3*	6210-ZZ	6210-ZZ
64 3-1 F6/30	6315 ZZDT C3*	6210-ZZ	6210-ZZ
64 3-0 F6/30	6315 ZZDT C3*	6210-ZZ	6210-ZZ
64 4-3 F6/30	6315 ZZDT C3*	6210-ZZ	6210-ZZ
64 4-2 F6/37	6315 ZZDT C3*	6212-ZZ	6212-ZZ
64 4-1 F6/37	6315 ZZDT C3*	6212-ZZ	6212-ZZ

* DT= Two single row deep groove ball bearings matched for paired mounting in a tandem arrangement.

CONSTRUCTION

60Hz

Rev. G

MECHANICAL SEAL
EVM(.) 3-18

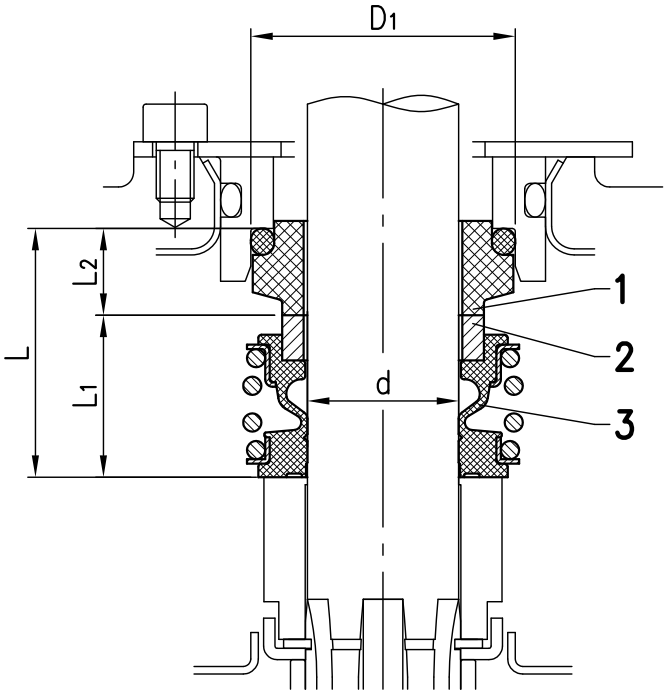

Pump type	Size [mm]	Max.working pressure [MPa]	d [mm]	D_1 [mm]	L [mm]	L_1 [mm]	L_2 [mm]	Material 1 stationary seal ring	Material 2 rotary seal ring	Material 3 rubber
3-5	12,7	1,6	12,7	23	23,5	16	7,5	Carbon graphite	Silicon carbide	FPM (1)
		2,5								
10	16	1,6	16	27	27	17	10			
		2,5								
18	20	1,6	20	35	33	21,5	11,5			
		2,5								

(1) EPDM Only for version EVM and EVMG

CONSTRUCTION

60Hz

Rev. G

MECHANICAL SEAL
EVM(.) 32-64

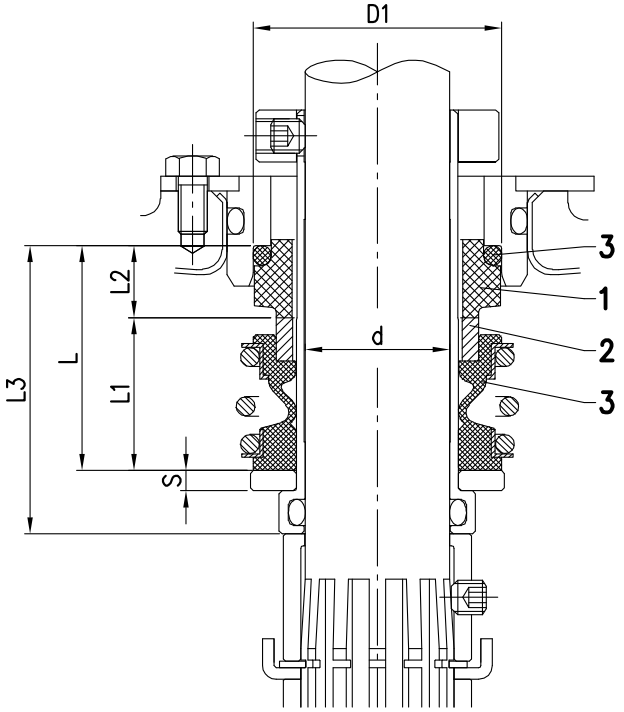

Up to 2.5 MPa

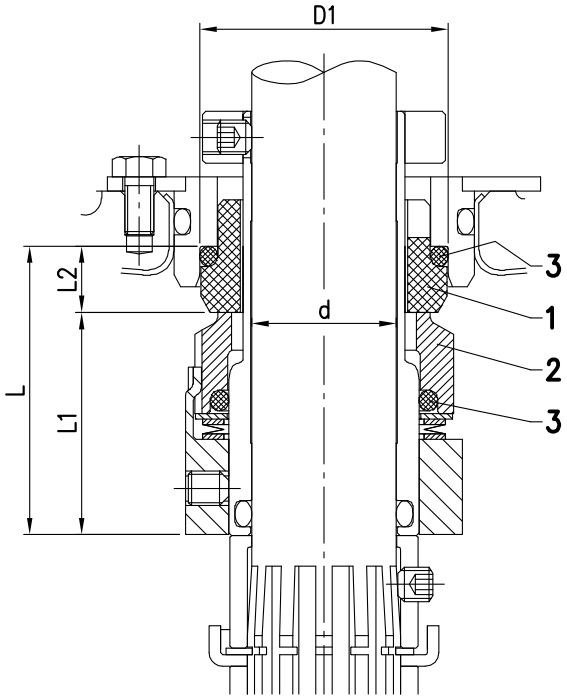

From 2.5 to 3.0 MPa

Size [mm]	Max. working pressure [MPa]	d [mm]	D_1 [mm]	L [mm]	L_1 [mm]	L_2 [mm]	L_3 [mm]	S [mm]	Material 1 stationary seal ring	Material 2 rotary seal ring	Material 3 rubber
25	2.5	25	43	39	26.5	12.5	50	3.5	Carbon graphite	Silicon carbide	FPM
	3			50	38.5	11.5	-	-			

DIMENSIONS AND WEIGHT

60Hz

Rev. G

PUMP
EVM(.) 3-18

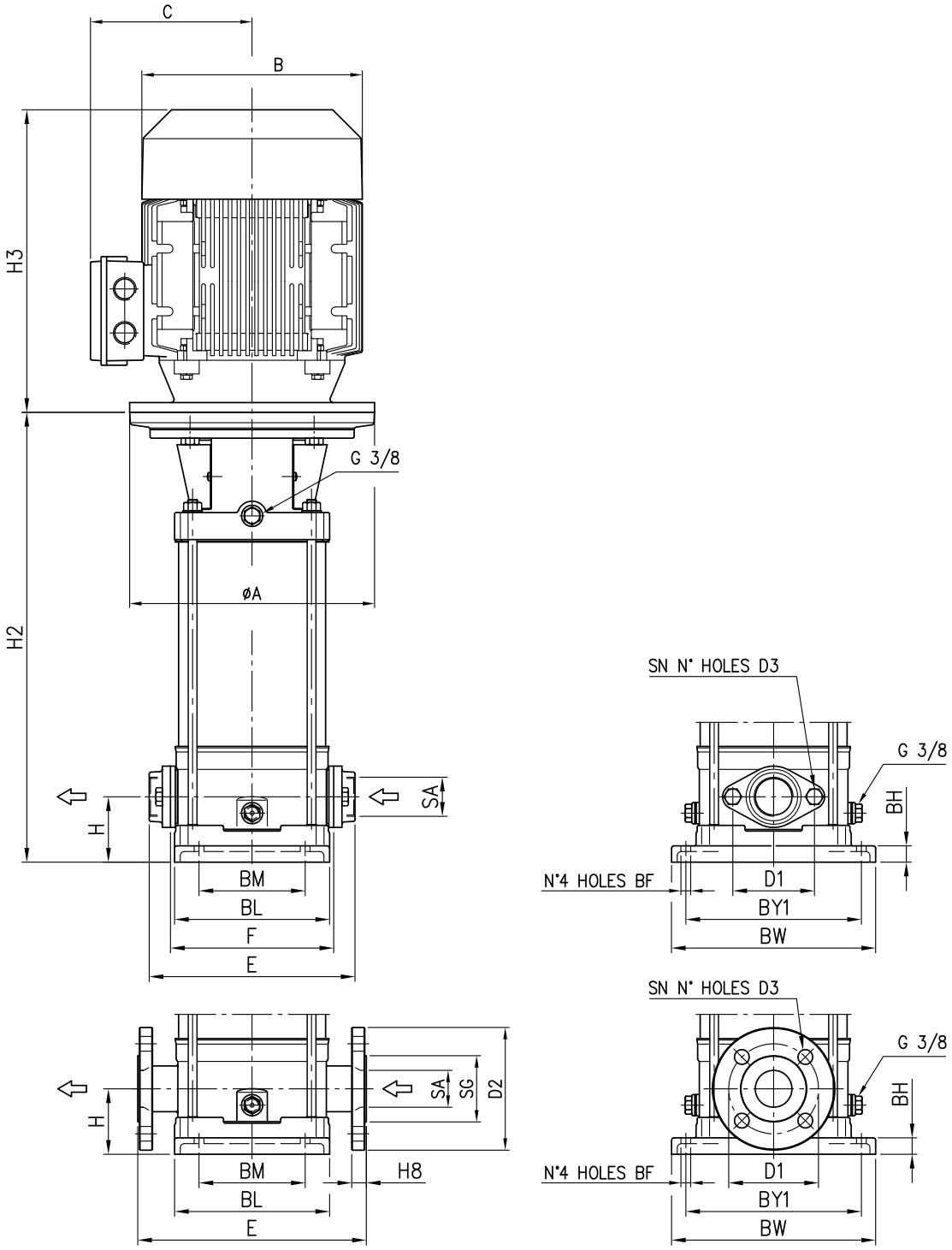

See dimensions pages 401, 402

DIMENSIONS AND WEIGHT

60Hz

Rev. G

DIMENSIONS TABLE
EVM(.) 3-5

Pump type	Pmax. [MPa] 2)	Motor Size	Dimensions [mm]																					Weight [kg]	
			H	H2	H3	F	E	B	C	BM	BL	BY1	BW	SA	SG	D1	D2	H8	SN	D3	BF	BH	A	Pump	Pump + motor
3 2N6/0.37	1,6	71	50	241	215	160	206	142	114	100	149	180	210	G 1"	-	75	-	-	2	M10	Ø12	20	Ø105	11	16,8
3 3N6/0.55	1,6	71	50	262	215	160	206	142	114	100	149	180	210	G 1"	-	75	-	-	2	M10	Ø12	20	Ø105	12	18,2
3 4N6/0.75	1,6	80	50	293	232	160	206	160	139	100	149	180	210	G 1"	-	75	-	-	2	M10	Ø12	20	Ø120	12	20,4
3 5N6 1.1	1,6	80	50	314	232	160	206	160	139	100	149	180	210	G 1"	-	75	-	-	2	M10	Ø12	20	Ø120	13	24,1
3 6N6/1.1	1,6	80	50	335	232	160	206	160	139	100	149	180	210	G 1"	-	75	-	-	2	M10	Ø12	20	Ø120	14	25,1
3 7N6/1.5	1,6	90S	50	366	267	160	206	180	148	100	149	180	210	G 1"	-	75	-	-	2	M10	Ø12	20	Ø140	14	28,0
3 8N6/1.5	1,6	90S	50	387	267	160	206	180	148	100	149	180	210	G 1"	-	75	-	-	2	M10	Ø12	20	Ø140	14	28,0
3 9N6/2.2	1,6	90L	50	408	267	160	206	180	148	100	149	180	210	G 1"	-	75	-	-	2	M10	Ø12	20	Ø140	15	31,0
3 11F6/2.2	2,5	90L	75	475	267	-	250	180	148	100	149	180	210	Ø25	Ø63	Ø85	Ø115	16	4	Ø14	Ø12	20	Ø140	16	32,0
3 12F6/2.2	2,5	90L	75	496	267	-	250	180	148	100	149	180	210	Ø25	Ø63	Ø85	Ø115	16	4	Ø14	Ø12	20	Ø140	17	33,0
3 13F6/3.0	2,5	100L	75	537	306	-	250	196	155	100	149	180	210	Ø25	Ø63	Ø85	Ø115	16	4	Ø14	Ø12	20	Ø160	18	40,8
3 15F6/3.0	2,5	100L	75	579	306	-	250	196	155	100	149	180	210	Ø25	Ø63	Ø85	Ø115	16	4	Ø14	Ø12	20	Ø160	21	43,8
3 18F6/4.0	2,5	112M	75	642	306	-	250	196	155	100	149	180	210	Ø25	Ø63	Ø85	Ø115	16	4	Ø14	Ø12	20	Ø160	25	47,8
5 2N6/0.75	1,6	80	50	265	232	160	206	160	139	100	149	180	210	G 1" 1/4	-	75	-	-	2	M10	Ø12	20	Ø120	12	20,4
5 3N6/1.1	1,6	80	50	293	232	160	206	160	139	100	149	180	210	G 1" 1/4	-	75	-	-	2	M10	Ø12	20	Ø120	12	23,1
5 4N6/1.5	1,6	90S	50	331	267	160	206	180	148	100	149	180	210	G 1" 1/4	-	75	-	-	2	M10	Ø12	20	Ø140	13	27,0
5 5N6/2.2	1,6	90L	50	359	267	160	206	180	148	100	149	180	210	G 1" 1/4	-	75	-	-	2	M10	Ø12	20	Ø140	14	30,0
5 6N6/2.2	1,6	90L	50	387	267	160	206	180	148	100	149	180	210	G 1" 1/4	-	75	-	-	2	M10	Ø12	20	Ø140	14	30,0
5 7N6/3.0	1,6	100L	50	435	306	160	206	196	155	100	149	180	210	G 1" 1/4	-	75	-	-	2	M10	Ø12	20	Ø160	15	37,8
5 8N6/3.0	1,6	100L	50	463	306	160	206	196	155	100	149	180	210	G 1" 1/4	-	75	-	-	2	M10	Ø12	20	Ø160	16	38,8
5 10N6/4.0	1,6	112M	50	519	306	160	206	196	155	100	149	180	210	G 1" 1/4	-	75	-	-	2	M10	Ø12	20	Ø160	18	40,8
5 11F6/4.0	2,5	112M	75	572	306	-	250	196	155	100	149	180	210	Ø32	Ø71	Ø100	Ø140	20	4	Ø14	Ø12	20	Ø160	22	44,8
5 12F6/4.0	2,5	112M	75	600	306	-	250	196	155	100	149	180	210	Ø32	Ø71	Ø100	Ø140	20	4	Ø14	Ø12	20	Ø160	23	45,8
5 14F6/5.5	2,5	132S	75	667	328	-	250	220	161	100	149	180	210	Ø32	Ø71	Ø100	Ø140	20	4	Ø14	Ø12	20	Ø300	25	63,6
5 16F65.5	2,5	132S	75	723	328	-	250	220	161	100	149	180	210	Ø32	Ø71	Ø100	Ø140	20	4	Ø14	Ø12	20	Ø300	27	65,6
5 19F6/7.5	2,5	132S	75	807	328	-	250	220	161	100	149	180	210	Ø32	Ø71	Ø100	Ø140	20	4	Ø14	Ø12	20	Ø300	29	69,4

1) AEG motor dimensions
2) 1,6 MPa=16 bar
2,5 MPa=25 bar

DIMENSIONS AND WEIGHT

60Hz

Rev. G

DIMENSIONS TABLE
EVM(.) 10-18

Pump type	Pmax. [MPa] 2)	Motor Size	Dimensions [mm]																					Weight [kg]	
			H	H2	H3	F	E	B	C	BM	BL	BY1	BW	SA	SG	D1	D2	H8	SN	D3	BF	BH	A	Pump	Pump + motor
10 2N6/1.5	1,6	90S	80	343	267	200	252	180	148	130	190	215	250	G 1"1/2	-	100	-	-	2	M12	Ø12	20	Ø140	18	32,0
10 3N6/2.2	1,6	90L	80	373	267	200	252	180	148	130	190	215	250	G 1"1/2	-	100	-	-	2	M12	Ø12	20	Ø140	20	36,0
10 4N6/3.0	1,6	100L	80	423	306	200	252	196	155	130	190	215	250	G 1"1/2	-	100	-	-	2	M12	Ø12	20	Ø160	22	44,8
10 5N6/4.0	1,6	112M	80	453	306	200	252	196	155	130	190	215	250	G 1"1/2	-	100	-	-	2	M12	Ø12	20	Ø160	23	45,8
10 6N6/4.0	1,6	112M	80	483	306	200	252	196	155	130	190	215	250	G 1"1/2	-	100	-	-	2	M12	Ø12	20	Ø160	24	46,8
10 8N6/5.5	1,6	132S	80	554	328	200	252	220	161	130	190	215	250	G 1"1/2	-	100	-	-	2	M12	Ø12	20	Ø300	31	69,6
10 10F6/7.5	2,5	132S	80	614	328	-	280	220	161	130	190	215	250	Ø40	Ø79	Ø110	Ø150	21	4	Ø18	Ø12	20	Ø300	35	75,4
10 11F6/7.5	2,5	132S	80	644	328	-	280	220	161	130	190	215	250	Ø40	Ø79	Ø110	Ø150	21	4	Ø18	Ø12	20	Ø300	38	78,4
10 12F6/7.5	2,5	132S	80	674	328	-	280	220	161	130	190	215	250	Ø40	Ø79	Ø110	Ø150	21	4	Ø18	Ø12	20	Ø300	43	83,4
10 14F6/11	2,5	160M	80	764	403	-	280	248	195	130	190	215	250	Ø40	Ø79	Ø110	Ø150	21	4	Ø18	Ø12	20	Ø350	46	108,5
10 16F6/11	2,5	160M	80	824	403	-	280	248	195	130	190	215	250	Ø40	Ø79	Ø110	Ø150	21	4	Ø18	Ø12	20	Ø350	48	110,5
18 1F6/2.2	1,6	90L	90	373	267	-	300	180	148	130	190	215	250	Ø50	Ø92	Ø125	Ø165	21	4	Ø18	Ø12	20	Ø140	26	42,0
18 2F6/3.0	1,6	100L	90	383	306	-	300	196	155	130	190	215	250	Ø50	Ø92	Ø125	Ø165	21	4	Ø18	Ø12	20	Ø160	27	49,8
18 3F6/5.5	1,6	132S	90	444	328	-	300	220	161	130	190	215	250	Ø50	Ø92	Ø125	Ø165	21	4	Ø18	Ø12	20	Ø300	29	67,6
18 4F6/7.5	1,6	132S	90	484	328	-	300	220	161	130	190	215	250	Ø50	Ø92	Ø125	Ø165	21	4	Ø18	Ø12	20	Ø300	31	71,4
18 5F6/7.5	1,6	132S	90	524	328	-	300	220	161	130	190	215	250	Ø50	Ø92	Ø125	Ø165	21	4	Ø18	Ø12	20	Ø300	38	78,4
18 6F6/11	1,6	160M	90	594	403	-	300	248	195	130	190	215	250	Ø50	Ø92	Ø125	Ø165	21	4	Ø18	Ø12	20	Ø350	41	103,5
18 7F6/11	2,5	160M	90	634	403	-	300	248	195	130	190	215	250	Ø50	Ø92	Ø125	Ø165	21	4	Ø18	Ø12	20	Ø350	44	106,5
18 8F6/15	2,5	160M	90	674	498	-	300	317	238	130	190	215	250	Ø50	Ø92	Ø125	Ø165	21	4	Ø18	Ø12	20	Ø350	44	131,1
18 10F6/15	2,5	160M	90	754	498	-	300	317	238	130	190	215	250	Ø50	Ø92	Ø125	Ø165	21	4	Ø18	Ø12	20	Ø350	54	141,1
18 11F6/18.5	2,5	160L	90	794	542	-	300	317	238	130	190	215	250	Ø50	Ø92	Ø125	Ø165	21	4	Ø18	Ø12	20	Ø350	56	153,5
18 12F6/18.5	2,5	160L	90	834	542	-	300	317	238	130	190	215	250	Ø50	Ø92	Ø125	Ø165	21	4	Ø18	Ø12	20	Ø350	57	154,5

1) AEG motor dimensions
2) 1,6 MPa=16 bar
2,5 MPa=25 bar

DIMENSIONS AND WEIGHT

60Hz

Rev. G

EVM(.) 32-64

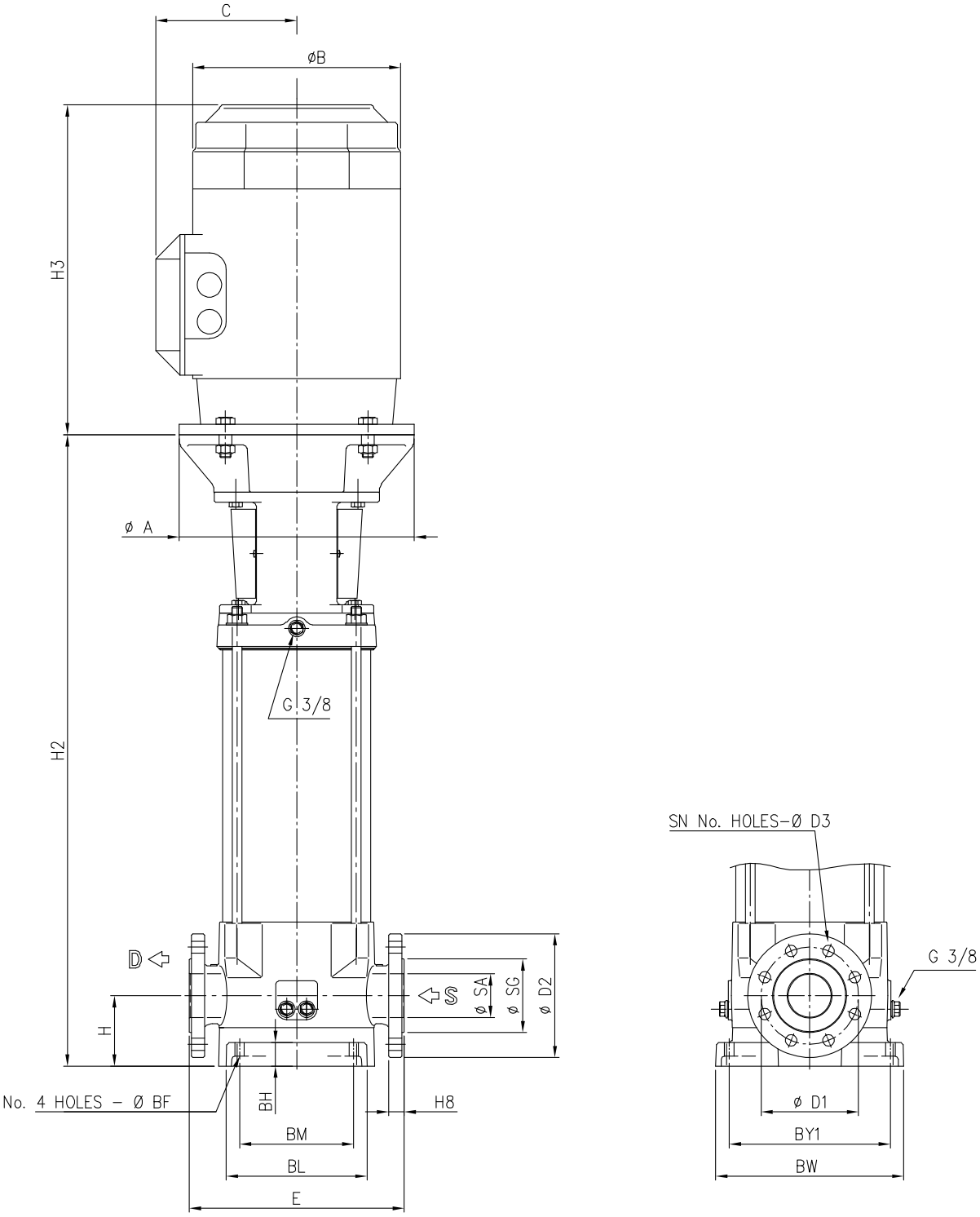

See dimensions pages 404,405,406

DIMENSIONS AND WEIGHT

60Hz

Rev. G

DIMENSIONS TABLE
EVM(.) 32

Pumptype	Pmax. [MPa] 2)	Motor Size	Dimensions [mm]																					Weight [kgf]	
			H	H2	H3 1) 3~	F	E	B 1) 3~	C 1) 3~	BM	BL	BY1	BW	SA	SG	D1	D2	H8	SN	D3	BF	BH	A	Pump	Pump + motor
32 1-0F6/4,0	1,6	112M	105	503	306	-	320	196	155	170	210	240	280	Ø65	Ø110	Ø145	Ø185	23	4	Ø18	Ø14	35	160	56	78,8
32 2-2F6/5,5	1,6	132S	105	524	328	-	320	220	161	170	210	240	280	Ø65	Ø110	Ø145	Ø185	23	4	Ø18	Ø14	35	300	58	96,6
32 2-0F6/7,5	1,6	132S	105	524	328	-	320	220	161	170	210	240	280	Ø65	Ø110	Ø145	Ø185	23	4	Ø18	Ø14	35	300	58	98,4
32 3-3F6/7,5	1,6	132S	105	572	328	-	320	220	161	170	210	240	280	Ø65	Ø110	Ø145	Ø185	23	4	Ø18	Ø14	35	300	74	114,4
32 3-0F6/11	1,6	160M	105	703	403	-	320	248	195	170	210	240	280	Ø65	Ø110	Ø145	Ø185	23	4	Ø18	Ø14	35	350	74	136,5
32 4-3F6/11	1,6	160M	105	751	403	-	320	248	195	170	210	240	280	Ø65	Ø110	Ø145	Ø185	23	4	Ø18	Ø14	35	350	77	139,5
32 4-0F6/15	1,6	160M	105	751	498	-	320	317	238	170	210	240	280	Ø65	Ø110	Ø145	Ø185	23	4	Ø18	Ø14	35	350	77	164,1
32 5-3F6/15	1,6	160M	105	799	498	-	320	317	238	170	210	240	280	Ø65	Ø110	Ø145	Ø185	23	4	Ø18	Ø14	35	350	96	183,1
32 5-2F6/15	1,6	160M	105	799	498	-	320	317	238	170	210	240	280	Ø65	Ø110	Ø145	Ø185	23	4	Ø18	Ø14	35	350	96	183,1
32 5-0F6/18,5	1,6	160L	105	799	542	-	320	317	238	170	210	240	280	Ø65	Ø110	Ø145	Ø185	23	4	Ø18	Ø14	35	350	96	193,5
32 6-3F6/18,5	2,5	160L	105	847	542	-	320	317	238	170	210	240	280	Ø65	Ø110	Ø145	Ø185	23	8	Ø18	Ø14	35	350	99	196,5
32 6-0F6/22	2,5	180M	105	847	577	-	320	360	268	170	210	240	280	Ø65	Ø110	Ø145	Ø185	23	8	Ø18	Ø14	35	350	99	262,0
32 7-3F6/22	2,5	180M	105	895	577	-	320	360	268	170	210	240	280	Ø65	Ø110	Ø145	Ø185	23	8	Ø18	Ø14	35	350	102	265,0
32 7-2F6/22	2,5	180M	105	895	577	-	320	360	268	170	210	240	280	Ø65	Ø110	Ø145	Ø185	23	8	Ø18	Ø14	35	350	102	265,0
32 7-0F6/30	2,5	200L	105	910	658	-	320	399	300	170	210	240	280	Ø65	Ø110	Ø145	Ø185	23	8	Ø18	Ø14	35	400	105	333,0
32 8-3F6/30	2,5	200L	105	958	658	-	320	399	300	170	210	240	280	Ø65	Ø110	Ø145	Ø185	23	8	Ø18	Ø14	35	400	105	333,0
32 8-0F6/30	3,0	200L	105	958	658	-	320	399	300	170	210	240	280	Ø65	Ø110	Ø145	Ø185	23	8	Ø18	Ø14	35	400	105	333,0
32 9-3F6/30	3,0	200L	105	1006	658	-	320	399	300	170	210	240	280	Ø65	Ø110	Ø145	Ø185	23	8	Ø18	Ø14	35	400	108	336,0
32 9-0F6/30	3,0	200L	105	1006	658	-	320	399	300	170	210	240	280	Ø65	Ø110	Ø145	Ø185	23	8	Ø18	Ø14	35	400	108	336,0
32 10-4F6/30	3,0	200L	105	1054	658	-	320	399	300	170	210	240	280	Ø65	Ø110	Ø145	Ø185	23	8	Ø18	Ø14	35	400	108	336,0

1) AEG motor dimensions
2) 1.6 MPa=16 bar
2.5 MPa=25 bar
3.0 MPa=30 bar

DIMENSIONS AND WEIGHT

60Hz

Rev. G

DIMENSIONS TABLE
EVM(.) 45

Pump type	Pmax. [MPa] 2)	Motor Size	Dimensions [mm]																				Weight [kg]	
			H	H2	H3	E	B	C	BM	BL	BY1	BW	SA	SG	D1	D2	H8	SN	D3	BF	BH	A	Pump	Pump + motor
45 1-1F6/5.5	1,6	132S	140	546	328	365	220	161	190	251	266	331	Ø80	Ø120	Ø160	Ø200	20	8	Ø18	Ø14	45	300	56	94,6
45 1-0F6/7.5	1,6	132S	140	546	328	365	220	161	190	251	266	331	Ø80	Ø120	Ø160	Ø200	20	8	Ø18	Ø14	45	300	56	96,4
45 2-2F6/11	1,6	160M	140	749	403	365	248	195	190	251	266	331	Ø80	Ø120	Ø160	Ø200	20	8	Ø18	Ø14	45	350	58	120,5
45 2-1F6/11	1,6	160M	140	749	403	365	248	195	190	251	266	331	Ø80	Ø120	Ø160	Ø200	20	8	Ø18	Ø14	45	350	58	120,5
45 2-0F6/15	1,6	160M	140	749	498	365	317	238	190	251	266	331	Ø80	Ø120	Ø160	Ø200	20	8	Ø18	Ø14	45	350	58	145,1
45 3-3F6/15	1,6	160M	140	822	498	365	317	238	190	251	266	331	Ø80	Ø120	Ø160	Ø200	20	8	Ø18	Ø14	45	350	74	161,1
45 3-2F6/15	1,6	160M	140	822	498	365	317	238	190	251	266	331	Ø80	Ø120	Ø160	Ø200	20	8	Ø18	Ø14	45	350	74	161,1
45 3-1F6/18.5	1,6	160L	140	822	542	365	317	238	190	251	266	331	Ø80	Ø120	Ø160	Ø200	20	8	Ø18	Ø14	45	350	74	171,5
45 3-0F6/22	1,6	180M	140	822	577	365	360	268	190	251	266	331	Ø80	Ø120	Ø160	Ø200	20	8	Ø18	Ø14	45	350	74	237,0
45 4-3F6/18.5	1,6	160L	140	894	542	365	317	238	190	251	266	331	Ø80	Ø120	Ø160	Ø200	20	8	Ø18	Ø14	45	350	77	174,5
45 4-2F6/22	1,6	180M	140	894	577	365	360	268	190	251	266	331	Ø80	Ø120	Ø160	Ø200	20	8	Ø18	Ø14	45	350	77	240,0
45 4-1F6/30	1,6	200L	140	909	658	365	399	300	190	251	266	331	Ø80	Ø120	Ø160	Ø200	20	8	Ø18	Ø14	45	400	77	305,0
45 4-0F6/30	1,6	200L	140	909	658	365	399	300	190	251	266	331	Ø80	Ø120	Ø160	Ø200	20	8	Ø18	Ø14	45	400	77	305,0
45 5-3F6/30	2,5	200L	140	981	658	365	399	300	190	251	266	331	Ø80	Ø120	Ø160	Ø200	20	8	Ø18	Ø14	45	400	96	324,0
45 5-2F6/30	2,5	200L	140	981	658	365	399	300	190	251	266	331	Ø80	Ø120	Ø160	Ø200	20	8	Ø18	Ø14	45	400	96	324,0
45 5-1F6/30	2,5	200L	140	981	658	365	399	300	190	251	266	331	Ø80	Ø120	Ø160	Ø200	20	8	Ø18	Ø14	45	400	96	324,0
45 5-0F6/37	2,5	200L	140	981	658	365	399	300	190	251	266	331	Ø80	Ø120	Ø160	Ø200	20	8	Ø18	Ø14	45	400	96	338,0
45 6-3F6/37	2,5	200L	140	1053	658	365	399	300	190	251	266	331	Ø80	Ø120	Ø160	Ø200	20	8	Ø18	Ø14	45	400	99	341,0
45 6-2F6/37	2,5	200L	140	1053	658	365	399	300	190	251	266	331	Ø80	Ø120	Ø160	Ø200	20	8	Ø18	Ø14	45	400	99	341,0
45 6-1F6/37	2,5	200L	140	1053	658	365	399	300	190	251	266	331	Ø80	Ø120	Ø160	Ø200	20	8	Ø18	Ø14	45	400	99	341,0

1) AEG motor dimensions
2) 1.6 MPa=16 bar
2.5 MPa=25 bar

DIMENSIONS AND WEIGHT

60Hz

Rev. G

DIMENSIONS TABLE
EVM(.) 64

Pump type	Pmax. [MPa] 2)	Motor Size	Dimensions [mm]																				Weight [kg]	
			H	H2	H3	E	B	C	BM	BL	BY1	BW	SA	SG	D1	D2	H8	SN	D3	BF	BH	A	Pump	Pump + motor
64 1-1F6/7.5	1,6	132S	140	546	328	365	220	161	190	251	266	331	Ø100	Ø140	Ø180	Ø220	20	8	Ø18	Ø14	45	300	70	110,4
64 1-0F6/11	1,6	160M	140	677	403	365	248	195	190	251	266	331	Ø100	Ø140	Ø180	Ø220	20	8	Ø18	Ø14	45	350	77	139,5
64 2-2F6/15	1,6	160M	140	749	498	365	317	238	190	251	266	331	Ø100	Ø140	Ø180	Ø220	20	8	Ø18	Ø14	45	350	81	168,1
64 2-1F6/18.5	1,6	160L	140	749	542	365	317	238	190	251	266	331	Ø100	Ø140	Ø180	Ø220	20	8	Ø18	Ø14	45	350	94	191,5
64 2-0F6/22	1,6	180M	140	749	577	365	360	268	190	251	266	331	Ø100	Ø140	Ø180	Ø220	20	8	Ø18	Ø14	45	350	94	257,0
64 3-3F6/22	1,6	180M	140	821	577	365	360	268	190	251	266	331	Ø100	Ø140	Ø180	Ø220	20	8	Ø18	Ø14	45	350	99	262,0
64 3-2F6/30	1,6	200L	140	837	658	365	399	300	190	251	266	331	Ø100	Ø140	Ø180	Ø220	20	8	Ø18	Ø14	45	400	99	327,0
64 3-1F6/30	1,6	200L	140	837	658	365	399	300	190	251	266	331	Ø100	Ø140	Ø180	Ø220	20	8	Ø18	Ø14	45	400	99	327,0
64 3-0F6/30	1,6	200L	140	837	658	365	399	300	190	251	266	331	Ø100	Ø140	Ø180	Ø220	20	8	Ø18	Ø14	45	400	99	327,0
64 4-3F6/30	1,6	200L	140	909	658	365	399	300	190	251	266	331	Ø100	Ø140	Ø180	Ø220	20	8	Ø18	Ø14	45	400	108	336,0
64 4-2F6/37	1,6	200L	140	909	658	365	399	300	190	251	266	331	Ø100	Ø140	Ø180	Ø220	20	8	Ø18	Ø14	45	400	108	350,0
64 4-1F6/37	1,6	200L	140	909	658	365	399	300	190	251	266	331	Ø100	Ø140	Ø180	Ø220	20	8	Ø18	Ø14	45	400	108	350,0

1) AEG motor dimensions
2) 1.6 MPa=16 bar

PACKING

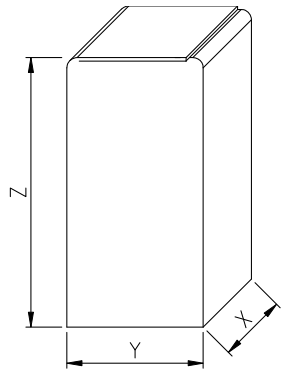

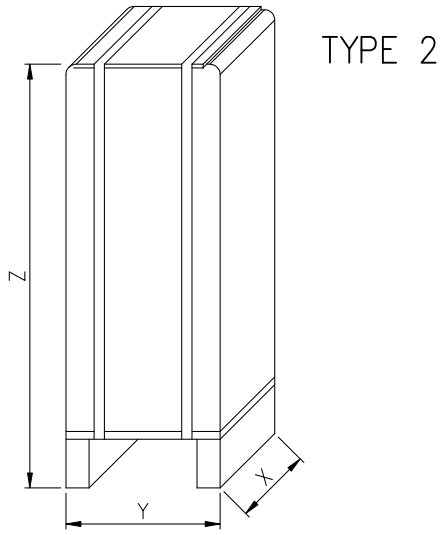

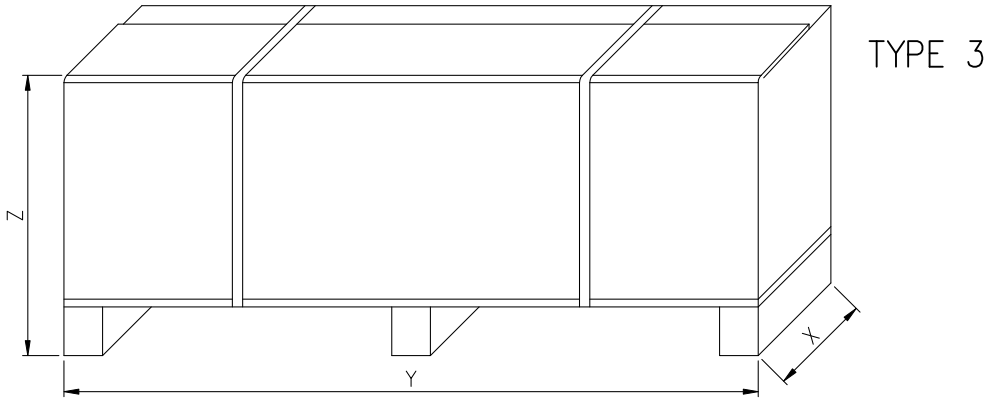

PACKING TABLE
EVM(.) 3-5

Pump type	Pumps					Pumps w ith motor ~3				
	Packing [mm]			Weight	Pack	Packing [mm]			Weight	Pack
	X	Y	Z	[kgf]	Type	X	Y	Z	[kgf]	Type
3 2N6/0.37	265	265	410	12,3	1	265	265	525	18,2	1
3 3N6/0.55	265	265	410	12,8	1	265	265	525	19,3	1
3 4N6/0.75	265	265	410	13,3	1	300	300	825	24,7	2
3 5N6 1.1	265	265	410	13,8	1	300	300	825	27,9	2
3 6N6/1.1	265	265	410	14,7	1	300	300	825	28,8	2
3 7N6/1.5	265	265	410	14,9	1	300	300	825	31,9	2
3 8N6/1.5	265	265	525	15,3	1	300	300	825	32,1	2
3 9N6/2.2	265	265	525	16,0	1	300	300	825	34,8	2
3 11F6/2.2	265	265	525	17,4	1	300	300	935	36,4	2
3 12F6/2.2	300	300	825	20,9	2	300	300	935	37,1	2
3 13F6/3.0	300	300	825	22,3	2	400	400	1047	47,8	2
3 15F6/3.0	300	300	825	25,2	2	400	400	1047	50,8	2
3 18F6/4.0	300	300	825	28,8	2	400	400	1047	65,0	2
5 2N6/0.75	265	265	410	12,5	1	265	265	525	21,1	1
5 3N6/1.1	265	265	410	13,0	1	300	300	825	27,1	2
5 4N6/1.5	265	265	410	13,9	1	300	300	825	30,9	2
5 5N6/2.2	265	265	410	14,5	1	300	300	825	33,5	2
5 6N6/2.2	265	265	525	15,3	1	300	300	825	34,1	2
5 7N6/3.0	265	265	525	16,1	1	300	300	935	41,9	2
5 8N6/3.0	265	265	525	16,7	1	300	300	935	42,5	2
5 10N6/4.0	300	300	825	21,9	2	400	400	1047	55,2	2
5 11F6/4.0	300	300	825	26,4	2	400	400	1047	59,7	2
5 12F6/4.0	300	300	825	27,1	2	400	400	1047	63,3	2
5 14F6/5.5	400	400	1047	32,2	2	480	480	1297	82,1	2
5 16F6/5.5	400	400	1047	33,5	2	480	480	1297	83,4	2
5 19F6/7.5	400	400	1047	36,2	2	410	1350	542	90,6	3

PACKING TABLE
EVM(.) 10-18

Pump type	Pumps					Pumps w ith motor ~3				
	Packing [mm]			Weight	Pack	Packing [mm]			Weight	Pack
	X	Y	Z	[kgf]	Type	X	Y	Z	[kgf]	Type
10 2N6/1.5	265	265	410	22,0	1	300	300	825	36,0	2
10 3N6/2.2	265	265	410	20,5	1	300	300	825	39,5	2
10 4N6/3.0	265	265	525	22,9	1	300	300	935	48,9	2
10 5N6/4.0	265	265	525	23,5	1	300	300	935	57,2	2
10 6N6/4.0	265	265	525	25,0	1	400	400	1047	61,3	2
10 8N6/5.5	400	400	780	35,7	2	400	400	1047	86,9	2
10 10F6/7.5	400	400	780	40,5	2	400	400	1047	92,4	2
10 11F6/7.5	400	400	1047	44,6	2	480	480	1297	95,3	2
10 12F6/7.5	400	400	1047	49,8	2	480	480	1297	100,5	2
10 14F6/11	400	400	1047	52,3	2	500	1350	552	146,7	3
10 16F6/11	400	400	1047	54,5	2	520	1540	547	149,5	3
18 1F6/2.2	400	400	780	31,0	2	400	400	780	47,0	2
18 2F6/3.0	400	400	780	32,5	2	400	400	1047	56,9	2
18 3F6/5.5	400	400	780	34,0	2	400	400	1047	82,2	2
18 4F6/7.5	400	400	780	36,5	2	400	400	1047	85,5	2
18 5F6/7.5	400	400	780	43,5	2	400	400	1047	92,5	2
18 6F6/11	400	400	780	46,5	2	480	480	1297	137,9	2
18 7F6/11	400	400	780	49,0	2	500	1350	552	145,0	3
18 8F6/15	400	400	1047	50,5	2	500	1350	552	144,5	3
18 10F6/15	400	400	1047	61,0	2	500	1350	552	155,0	3
18 11F6/18.5	400	400	1047	62,5	2	520	1540	547	162,0	3
18 12F6/18.5	400	400	1047	64,0	2	520	1540	547	163,5	3

PACKING TABLE
EVM(.) 32

Pumptype	Pumps						Pumps with motor ~3					
	Packing [mm]			Weight [kgf]	Weight [kgf]	Pack Type	Packing [mm]			Weight [kgf]	Weight [kgf]	Pack Type
	X	Y	Z	EVM(G)	EVM(L)		X	Y	Z	EVM(G)	EVM(L)	
32 1-0F6/4,0	400	400	780	61	66	2	400	400	1047	93	98	2
32 2-2F6/5,5	400	400	780	65	71	2	400	400	1047	106	111	2
32 2-0F6/7,5	400	400	780	68	73	2	400	400	1047	109	115	2
32 3-3F6/7,5	400	400	780	72	79	2	400	400	1047	113	121	2
32 3-0F6/11	400	400	1047	84	91	2	500	1350	545	154	161	3
32 4-3F6/11	400	400	1047	87	94	2	500	1350	545	157	164	3
32 4-0F6/15	400	400	1047	87	94	2	500	1350	545	180	187	3
32 5-3F6/15	400	400	1047	94	103	2	500	1540	540	187	196	3
32 5-2F6/15	400	400	1047	94	103	2	500	1540	540	187	196	3
32 5-0F6/18,5	400	400	1047	97	103	2	500	1540	540	192	201	3
32 6-3F6/18,5	400	400	1047	97	106	2	500	1540	540	195	204	3
32 6-0F6/22	400	400	1047	97	106	2	610	1750	593	249	258	3
32 7-3F6/22	400	400	1047	110	119	2	610	1750	593	262	271	3
32 7-2F6/22	400	400	1047	110	119	2	610	1750	593	262	271	3
32 7-0F6/30	480	480	1147	116	125	2	610	1750	593	315	324	3
32 8-3F6/30	480	480	1147	115	125	2	610	1750	593	314	324	3
32 8-0F6/30	480	480	1147	115	125	2	610	1750	593	314	324	3
32 9-3F6/30	480	480	1297	125	135	2	610	1750	593	317	327	3
32 9-0F6/30	480	480	1297	125	135	2	610	1750	593	317	327	3
32 10-4F6/30	480	480	1297	124	135	2	635	2130	607	377	388	3

PACKING TABLE
EVM(.) 45

Pumptype	Pumps						Pumps with motor ~3					
	Packing [mm]			Weight [kgf]	Weight [kgf]	Pack Type	Packing [mm]			Weight [kgf]	Weight [kgf]	Pack Type
	X	Y	Z	EVM(G)	EVM(L)		X	Y	Z	EVM(G)	EVM(L)	
45 1-1F6/5.5	400	400	780	62	69	2	400	400	1047	102	95	2
45 1-0F6/7.5	400	400	780	64	71	2	400	400	1047	106	109	2
45 2-2F6/11	400	400	1047	68	75	2	500	1350	545	138	134	3
45 2-1F6/11	400	400	1047	68	75	2	500	1350	545	138	134	3
45 2-0F6/15	400	400	1047	68	75	2	500	1350	545	161	168	3
45 3-3F6/15	400	400	1047	72	81	2	500	1540	540	165	174	3
45 3-2F6/15	400	400	1047	72	81	2	500	1540	540	165	174	3
45 3-1F6/18.5	400	400	1047	72	81	2	500	1540	540	170	179	3
45 3-0F6/22	400	400	1047	82	91	2	500	1540	540	227	236	3
45 4-3F6/18.5	400	400	1047	74	84	2	500	1540	540	172	182	3
45 4-2F6/22	400	400	1047	84	94	2	610	1750	593	236	146	3
45 4-1F6/30	480	480	1147	87	97	2	610	1750	593	286	296	3
45 4-0F6/30	480	480	1147	87	97	2	610	1750	593	286	296	3
45 5-3F6/30	480	480	1147	104	116	2	610	1750	593	303	315	3
45 5-2F6/30	480	480	1147	104	116	2	610	1750	593	303	315	3
45 5-1F6/30	480	480	1147	104	116	2	610	1750	593	303	315	3
45 5-0F6/37	480	480	1147	104	116	2	610	1750	593	317	329	3
45 6-3F6/37	480	480	1297	103	116	2	635	2130	607	370	383	3
45 6-2F6/37	480	480	1297	103	116	2	635	2130	607	370	383	3
45 6-1F6/37	480	480	1297	103	116	2	635	2130	607	370	383	3

PACKING TABLE
EVM(.) 64

Pumptype	Pumps						Pumps w ith motor ~3					
	Packing [mm]			Weight [kgf]	Weight [kgf]	Pack Type	Packing [mm]			Weight [kgf]	Weight [kgf]	Pack Type
	X	Y	Z	EVM(G)	EVM(L)		X	Y	Z	EVM(G)	EVM(L)	
64 1-1F6/7.5	400	400	780	79	86	2	400	400	1047	121	127	2
64 1-0F6/11	400	400	1047	77	84	2	500	1350	545	147	154	3
64 2-2F6/15	400	400	1047	91	98	2	500	1350	545	184	192	3
64 2-1F6/18.5	400	400	1047	92	100	2	500	1540	540	190	199	3
64 2-0F6/22	400	400	1047	102	110	2	610	1750	593	254	262	3
64 3-3F6/22	400	400	1047	107	116	2	610	1750	593	259	268	3
64 3-2F6/30	480	480	1147	110	119	2	610	1750	593	309	318	3
64 3-1F6/30	480	480	1147	110	119	2	610	1750	593	309	318	3
64 3-0F6/30	480	480	1147	110	119	2	610	1750	593	309	318	3
64 4-3F6/30	480	480	1147	117	128	2	610	1750	593	316	327	3
64 4-2F6/37	480	480	1147	117	128	2	610	1750	593	330	341	3
64 4-1F6/37	480	480	1147	117	128	2	610	1750	593	330	341	3

MOTOR DATA

EVM(.) 3-18

Pump type EVM(.)	Efficiency	Motor			Full load efficency and power-factor		Full load current [A]					Locked rotor current [A]				
		Motor Size	Power [kW]	Power [HP]	η % 100%	cos−ϕ	220V	265 V	380 V	460 V	660 V	220 V	265 V	380 V	460 V	660 V
3 2N6/0.37	-	71	0.37	0.5	67,7	0,72	2,1	1,7	1,2	1,0	-	8,8	9,6	5,1	5,6	-
3 3N6/0.55	-	71	0.55	0.75	72,4	0,72	2,9	2,4	1,7	1,4	-	12,7	15,1	7,3	8,7	-
3 4N6/0.75	(*) IE2	80	0.75	1	82,0	0,73	3,4	2,7	1,9	1,6	-	23,5	19,4	13,6	11,2	-
3 5N6/1.1	(*) IE2	80	1.1	1.5	83,0	0,76	4,6	3,8	2,7	2,2	-	35,2	29,1	20,3	16,8	-
3 6N6/1.1	(*) IE2	80	1.1	1.5	83,0	0,76	4,6	3,8	2,7	2,2	-	35,2	29,1	20,3	16,8	-
3 7N6/1.5	(*) IE2	90S	1.5	2	84,3	0,88	5,7	4,7	3,3	2,7	-	50,3	41,6	29,1	24,0	-
3 8N6/1.5	(*) IE2	90S	1.5	2	84,3	0,88	5,7	4,7	3,3	2,7	-	50,3	41,6	29,1	24,0	-
3 9N6/2.2	(*) IE2	90L	2.2	3	86,3	0,84	8,2	6,8	4,7	3,9	-	77,6	64,1	44,8	37,0	-
3 11F6/2.2	(*) IE2	90L	2.2	3	86,3	0,84	8,2	6,8	4,7	3,9	-	77,6	64,1	44,8	37,0	-
3 12F6/2.2	(*) IE2	90L	2.2	3	86,3	0,84	8,2	6,8	4,7	3,9	-	77,6	64,1	44,8	37,0	-
3 13F6/3.0	(*) IE2	100L	3	4	87,7	0,82	10,5	8,7	6,1	5,0	-	100,6	83,1	58,1	48,0	-
3 15F6/3.0	(*) IE2	100L	3	4	87,7	0,82	10,5	8,7	6,1	5,0	-	100,6	83,1	58,1	48,0	-
3 18F6/4.0	(*) IE2	112M	4	5,5	87,7	0,82	14,7	12,1	8,5	7,0	-	136,3	112,6	78,7	65,0	-
5 2N6/0.75	(*) IE2	80	0.75	1	82,0	0,73	3,4	2,7	1,9	1,6	-	23,5	19,4	13,6	11,2	-
5 3N6/1.1	(*) IE2	80	1.1	1.5	83,0	0,76	4,6	3,8	2,7	2,2	-	35,2	29,1	20,3	16,8	-
5 4N6/1.5	(*) IE2	90S	1.5	2	84,3	0,88	5,7	4,7	3,3	2,7	-	50,3	41,6	29,1	24,0	-
5 5N6/2.2	(*) IE2	90L	2.2	3	86,3	0,84	8,2	6,8	4,7	3,9	-	77,6	64,1	44,8	37,0	-
5 6N6/2.2	(*) IE2	90L	2.2	3	86,3	0,84	8,2	6,8	4,7	3,9	-	77,6	64,1	44,8	37,0	-
5 7N6/3.0	(*) IE2	100L	3	4	87,7	0,82	10,5	8,7	6,1	5,0	-	100,6	83,1	58,1	48,0	-
5 8N6/3.0	(*) IE2	100L	3	4	87,7	0,82	10,5	8,7	6,1	5,0	-	100,6	83,1	58,1	48,0	-
5 10N6/4.0	(*) IE2	112M	4	5.5	87,7	0,82	14,7	12,1	8,5	7,0	-	136,3	112,6	78,7	65,0	-
5 11F6/4.0	(*) IE2	112M	4	5.5	87,7	0,82	14,7	12,1	8,5	7,0	-	136,3	112,6	78,7	65,0	-
5 12F6/4.0	(*) IE2	112M	4	5.5	87,7	0,82	14,7	12,1	8,5	7,0	-	136,3	112,6	78,7	65,0	-
5 14F6/5.5	(*) IE2	132S	5.5	7.5	88,5	0,85	-	-	11,3	9,3	6,5	-	-	100,5	83,0	58,0
5 16F6/5.5	(*) IE2	132S	5.5	7.5	88,5	0,85	-	-	11,3	9,3	6,5	-	-	100,5	83,0	58,0
5 19F6/7.5	(*) IE2	132S	7.5	10	89,5	0,86	-	-	14,8	12,2	8,5	-	-	140,4	116,0	81,1
10 2N6/1.5	(*) IE2	90S	1.5	2	84,3	0,88	5,7	4,7	3,3	2,7	-	50,3	41,6	29,1	24,0	-
10 3N6/2.2	(*) IE2	90S	2.2	3	86,3	0,84	8,2	6,8	4,7	3,9	-	77,6	64,1	44,8	37,0	-
10 4N6/3.0	(*) IE2	100L	3	4	87,7	0,82	10,5	8,7	6,1	5,0	-	100,6	83,1	58,1	48,0	-
10 5N6/4.0	(*) IE2	112M	4	5.5	87,7	0,82	14,7	12,1	8,5	7,0	-	136,3	112,6	78,7	65,0	-
10 6N6/4.0	(*) IE2	112M	4	5.5	87,7	0,82	14,7	12,1	8,5	7,0	-	136,3	112,6	78,7	65,0	-
10 8N6/5.5	(*) IE2	132S	5.5	7.5	88,5	0,85	-	-	11,3	9,3	6,5	-	-	100,5	83,0	58,0
10 10F6/7.5	(*) IE2	132S	7.5	10	89,5	0,86	-	-	14,8	12,2	8,5	-	-	140,4	116,0	81,1
10 11F6/7.5	(*) IE2	132S	7.5	10	89,5	0,86	-	-	14,8	12,2	8,5	-	-	140,4	116,0	81,1
10 12F6/7.5	(*) IE2	132S	7.5	10	89,5	0,86	-	-	14,8	12,2	8,5	-	-	140,4	116,0	81,1
10 14F6/11	(*) IE2	160M	11	15	90,3	0,85	-	-	21,8	18,0	12,6	-	-	175,5	145,0	101,3
10 16F6/11	(*) IE2	160M	11	15	90,3	0,85	-	-	21,8	18,0	12,6	-	-	175,5	145,0	101,3
18 1F6/2.2	(*) IE2	90L	2.2	3	86,3	0,84	8,2	6,8	4,7	3,9	-	77,6	64,1	44,8	37,0	-
18 2F6/3.0	(*) IE2	100L	3	4	87,7	0,82	10,5	8,7	6,1	5,0	-	100,6	83,1	58,1	48,0	-
18 3F6/5.5	(*) IE2	132S	5.5	7.5	88,5	0,85	-	-	11,3	9,3	6,5	-	-	100,5	83,0	58,0
18 4F6/7.5	(*) IE2	132S	7.5	10	89,5	0,86	-	-	14,8	12,2	8,5	-	-	140,4	116,0	81,1
18 5F6/7.5	(*) IE2	132S	7.5	10	89,5	0,86	-	-	14,8	12,2	8,5	-	-	140,4	116,0	81,1
18 6F6/11	(*) IE2	160M	11	15	90,3	0,85	-	-	21,8	18,0	12,6	-	-	175,5	145,0	101,3
18 7F6/11	(*) IE2	160M	11	15	90,3	0,85	-	-	21,8	18,0	12,6	-	-	175,5	145,0	101,3
18 8F6/15	(*) IE2	160M	15	20	91,0	0,88	-	-	28,4	23,5	16,4	-	-	250,6	207,0	144,7
18 10F6/15	(*) IE2	160M	15	20	91,0	0,88	-	-	28,4	23,5	16,4	-	-	250,6	207,0	144,7
18 11F6/18.5	(*) IE2	160L	18.5	25	91,7	0,87	-	-	34,9	28,8	20,1	-	-	314,7	260,0	181,7
18 12 F6/18.5	(*) IE2	160L	18.5	25	91,7	0,87	-	-	34,9	28,8	20,1	-	-	314,7	260,0	181,7

(*) only for voltage 265/460 V ±10% and 460 V ±10% Delta connection

TECHNICAL DATA

60Hz

Rev. G

EVM(.) 32

Pumptype EVM(.)	Efficiency	Motor			Full load efficency and power-factor		Full load current [A]					Locked rotor current [A]				
		Motor Size	Power [kW]	[HP]	η % 100%	cos-ϕ	220V	265 V	380 V	460 V	660 V	220 V	265 V	380 V	460 V	660 V
32 1-0F6/4.0	(*) IE2	112M	4	5,5	87,7	0,82	14,6	12,1	8,5	7,0	-	135,6	112,6	78,7	65,0	-
32 2-2F6/5.5	(*) IE2	132S	5,5	7,5	88,5	0,85	-	-	11,3	9,3	6,5	-	-	100,5	83,0	58,0
32 2-0F6/7.5	(*) IE2	132S	7,5	10	89,5	0,86	-	-	14,8	12,2	8,5	-	-	140,4	116,0	81,1
32 3-3F67.5	(*) IE2	132S	7,5	10	89,5	0,86	-	-	14,8	12,2	8,5	-	-	140,4	116,0	81,1
32 3-0F6/11	(*) IE2	160M	11	15	90,3	0,85	-	-	21,8	18,0	12,6	-	-	175,5	145,0	101,3
32 4-3F6/11	(*) IE2	160M	11	15	90,3	0,85	-	-	21,8	18,0	12,6	-	-	175,5	145,0	101,3
32 4-0F6/15	(*) IE2	160M	15	20	91,0	0,88	-	-	28,4	23,5	16,4	-	-	250,6	207,0	144,7
32 5-3F6/15	(*) IE2	160M	15	20	91,0	0,88	-	-	28,4	23,5	16,4	-	-	250,6	207,0	144,7
32 5-2F6/15	(*) IE2	160M	15	20	91,0	0,88	-	-	28,4	23,5	16,4	-	-	250,6	207,0	144,7
32 5-0F6/18.5	(*) IE2	160L	18,5	25	91,7	0,87	-	-	34,9	28,8	20,1	-	-	314,7	260,0	181,7
32 6-3F6/18.5	(*) IE2	160L	18,5	25	91,7	0,87	-	-	34,9	28,8	20,1	-	-	314,7	260,0	181,7
32 6-0F6/22	(*) IE2	180M	22	30	91,3	0,89	-	-	41,2	34,0	23,8	-	-	351,1	290,0	202,7
32 7-3F6/22	(*) IE2	180M	22	30	91,3	0,89	-	-	41,2	34,0	23,8	-	-	351,1	290,0	202,7
32 7-2F6/22	(*) IE2	180M	22	30	91,3	0,89	-	-	41,2	34,0	23,8	-	-	351,1	290,0	202,7
32 7-0F6/30	(*) IE2	200L	30	40	92,0	0,87	-	-	56,9	47,0	32,8	-	-	427,3	353,0	246,7
32 -8-3F6/30	(*) IE2	200L	30	40	92,0	0,87	-	-	56,9	47,0	32,8	-	-	427,3	353,0	246,7
32 8-0F6/30	(*) IE2	200L	30	40	92,0	0,87	-	-	56,9	47,0	32,8	-	-	427,3	353,0	246,7
32 9-3F6/30	(*) IE2	200L	30	40	92,0	0,87	-	-	56,9	47,0	32,8	-	-	427,3	353,0	246,7
32 9-0F6/30	(*) IE2	200L	30	40	92,0	0,87	-	-	56,9	47,0	32,8	-	-	427,3	353,0	246,7
32 10-4F6/30	(*) IE2	200L	30	40	92,0	0,87	-	-	56,9	47,0	32,8	-	-	427,3	353,0	246,7

(*) only for voltage 265/460 V ±10% and 460 V ±10% Delta connection

EVM(.) 45

Pumptype EVM(.)	Efficiency	Motor Size	Motor Power [kW]	Motor Power [HP]	Full load efficency and power-factor η % 100%	cos-ϕ	Full load current [A] 380 V	460 V	660 V	Locked rotor current [A] 380 V	460 V	660 V
45 1-1F6/5.5	(*) IE2	132S	5,5	7,5	88,5	0,85	11,3	9,3	6,5	100,5	83,0	58,0
45 1-0F6/7.5	(*) IE2	132S	7,5	10	89,5	0,86	14,8	12,2	8,5	140,4	116,0	81,1
45 2-2F6/11	(*) IE2	160M	11	15	90,3	0,85	21,8	18,0	12,6	175,5	145,0	101,3
45 2-1F6/11	(*) IE2	160M	11	15	90,3	0,85	21,8	18,0	12,6	175,5	145,0	101,3
45 2-0F6/15	(*) IE2	160M	15	20	91,0	0,88	28,4	23,5	16,4	250,6	207,0	144,7
45 3-3F6/15	(*) IE2	160M	15	20	91,0	0,88	28,4	23,5	16,4	250,6	207,0	144,7
45 3-2F6/15	(*) IE2	160M	15	20	91,0	0,88	28,4	23,5	16,4	250,6	207,0	144,7
45 3-1F6/18.5	(*) IE2	160L	18,5	25	91,7	0,87	34,9	28,8	20,1	314,7	260,0	181,7
45 3-0F6/22	(*) IE2	180M	22	30	91,3	0,89	41,2	34,0	23,8	351,1	290,0	202,7
45 4-3F6/18.5	(*) IE2	160L	18,5	25	91,7	0,87	34,9	28,8	20,1	314,7	260,0	181,7
45 4-2F6/22	(*) IE2	180M	22	30	91,3	0,89	41,2	34,0	23,8	351,1	290,0	202,7
45 4-1F6/30	(*) IE2	200L	30	40	92,0	0,87	56,9	47,0	32,8	427,3	353,0	246,7
45 4-0F6/30	(*) IE2	200L	30	40	92,0	0,87	56,9	47,0	32,8	427,3	353,0	246,7
45 5-3F6/30	(*) IE2	200L	30	40	92,0	0,87	56,9	47,0	32,8	427,3	353,0	246,7
45 5-2F6/30	(*) IE2	200L	30	40	92,0	0,87	56,9	47,0	32,8	427,3	353,0	246,7
45 5-1F6/30	(*) IE2	200L	30	40	92,0	0,87	56,9	47,0	32,8	427,3	353,0	246,7
45 5-0F6/37	(*) IE2	200L	37	50	92,4	0,90	67,8	56,0	39,1	486,6	402,0	281,0
45 6-3F6/37	(*) IE2	200L	37	50	92,4	0,90	67,8	56,0	39,1	486,6	402,0	281,0
45 6-2F6/37	(*) IE2	200L	37	50	92,4	0,90	67,8	56,0	39,1	486,6	402,0	281,0
45 6-1F6/37	(*) IE2	200L	37	50	92,4	0,90	67,8	56,0	39,1	486,6	402,0	281,0

(*) only for voltage 460 V ±10% Delta connection

TECHNICAL DATA

60Hz

Rev. G

EVM(.) 64

Pumptype EVM(.)	Efficiency	Motor			Full load efficency and power-factor		Full load current [A]			Locked rotor current [A]		
		Motor size	Power [kW]	Power [HP]	η % 100%	cos–ϕ	380 V	460 V	660 V	380 V	460 V	660 V
64 1-1F6/7.5	(*) IE2	132S	7,5	10	89,5	0,86	14,8	12,2	8,5	140,4	116,0	81,1
64 1-0F6/11	(*) IE2	160M	11	15	90,3	0,85	21,8	18,0	12,6	175,5	145,0	101,3
64 2-2F6/15	(*) IE2	160M	15	20	91,0	0,88	28,4	23,5	16,4	250,6	207,0	144,7
64 2-1F6/18.5	(*) IE2	160L	18,5	25	91,7	0,87	34,9	28,8	20,1	314,7	260,0	181,7
64 2-0F6/22	(*) IE2	180M	22	30	91,3	0,89	41,2	34,0	23,8	351,1	290,0	202,7
64 3-3F6/22	(*) IE2	180M	22	30	91,3	0,89	41,2	34,0	23,8	351,1	290,0	202,7
64 3-2F6/30	(*) IE2	200L	30	40	92,0	0,87	56,9	47,0	32,8	427,3	353,0	246,7
64 3-1F6/30	(*) IE2	200L	30	40	92,0	0,87	56,9	47,0	32,8	427,3	353,0	246,7
64 3-0F6/30	(*) IE2	200L	30	40	92,0	0,87	56,9	47,0	32,8	427,3	353,0	246,7
64 4-3F6/30	(*) IE2	200L	30	40	92,0	0,87	56,9	47,0	32,8	427,3	353,0	246,7
64 4-2F6/37	(*) IE2	200L	37	50	92,4	0,90	67,8	56,0	39,1	486,6	402,0	281,0
64 4-1F6/37	(*) IE2	200L	37	50	92,4	0,90	67,8	56,0	39,1	486,6	402,0	281,0

(*) only for voltage 460 V ±10% Delta connection